CDX Field-Adjustable Cylinders

CDXSWM



CDXSP



CDXS



CDXMWM



CDXMP



CDXM



CDXLWM



CDXLP



CDXL



PROJECT:

DATE:

TYPE:

PREPARED BY:

5 YEAR LIMITED WARRANTY

CAN BE USED TO COMPLY WITH TITLE 24 PART 6 JA8 HIGH EFFICACY LED LIGHT SOURCE REQUIREMENTS

UL CERTIFIED

High-performance cylinders with field-adjustable power, CCT, beam angle, and distribution

100,000 HOURS

ADJUSTABLE BEAM ANGLE

DIMMING

FIELD ADJUSTABLE

WET RATED

IP RATED*

*Wall Mount models only

KEY FEATURES

- **Wall Mount & Pendant Mount**
  Small: 13/11/7W (Default: 13W)
  Medium: 17/15/9W (Default: 17W)
  Large: 33/30/18W (Default: 33W)
- **Surface Mount**
  Small: 11/7/5/3/2W
  Medium: 15/9/7/4/2W
  Large: 30/18/13/8/4W
- **Lighting & Optical Features**
  All models include adjustable beam angels and various models adjust distribution also.
- **Mounting & Accessories**
  Pendant and Surface Mount include a ceiling canopy.
- Some SKUs are Title 24 compliant
- 5-Year, limited warranty

PERFORMANCE

CDX Field-Adjustable Cylinder (Wall Mount)

Model	Wattages	Optics	Lumens (lm)	Efficacy (lm/W)	Color Temperature	CRI	Voltage
CDXSWM	13/11/7W	25°	565 - 1011	81 - 92	2700/3000/3500/4000/5000K CCT-Adjustable	93 - 96	120-277V 0-10V & 120V TRIAC dimming
		30°	542 - 972	77 - 88		93 - 96	
		45°	492 - 885	70 - 81		93 - 96	
		WW	565 - 1019	81 - 93		93 - 96	
CDXMWM	17/15/9W	25°	941 - 1702	102 - 113		91 - 94	
		50°	893 - 1616	97 - 107		91 - 94	
		55°	859 - 1549	93 - 103		91 - 94	
		WW	882 - 1598	94 - 110		91 - 94	
CDXLWM	33/30/18W	40°	1948 - 3472	104 - 120		91 - 95	
		55°	1867 - 3328	100 - 115		91 - 95	
		75°	1758 - 3144	94 - 109		91 - 95	
		WW	1977 - 3485	98 - 121		91 - 95	

CDX Field-Adjustable Cylinders

PERFORMANCE *(cont'd)*

CDX Field-Adjustable Cylinder (Pendant Mount)

Model	Wattages	Optics	Lumens (lm)	Efficacy (lm/W)	Color Temperature	CRI	Voltage
CDXSP	13/11/7W	25°	565 - 1011	81 - 92	2700/3000/3500/4000/5000K CCT-Adjustable	93 - 96	120-277V 0-10V & 120V TRIAC dimming
		30°	542 - 972	77 - 88		93 - 96	
		45°	492 - 885	70 - 81		93 - 96	
		None*	484 - 888	67 - 79		92 - 95	
CDXMP	17/15/19W	25°	941 - 1702	102 - 113		91 - 94	
		50°	893 - 1616	97 - 107		91 - 94	
		55°	859 - 1549	93 - 103		91 - 94	
		None*	655 - 1225	75 - 87		93 - 95	
CDXLP	33/30/18W	40°	1948 - 3472	108 - 120		91 - 95	
		55°	1867 - 3328	104 - 115		91 - 95	
		75°	1758 - 3144	98 - 109		91 - 95	
		None*	1487 - 2693	80 - 97		92 - 95	

CDX Field-Adjustable Cylinder (Surface Mount)

Model	Wattages	Optics	Lumens (lm)	Efficacy (lm/W)	Color Temperature	CRI	Voltage
CDXS	11/7/5/3/2W	25°	105 - 1011	55 - 92	2700/3000/3500/4000/5000K CCT-Adjustable	94 - 96	120-277V 0-10V & 120V TRIAC dimming
		30°	101 - 972	53 - 88		94 - 96	
		45°	92 - 885	48 - 81		94 - 96	
CDXM	15/9/7/4/2W	25°	188 - 1702	78 - 113		91 - 95	
		50°	178 - 1616	74 - 107		91 - 95	
		55°	171 - 1549	71 - 103		91 - 95	
CDXL	30/18/13/8/4W	40°	386 - 3472	97 - 126		92 - 95	
		55°	370 - 3328	93 - 121		92 - 95	
		75°	350 - 3144	88 - 114		92 - 95	

CDX Field-Adjustable Cylinders

PERFORMANCE *(cont'd)*

CDX SMALL WALL MOUNT

Model	Direction	Wattage	Input Wattage	Color Temp.	Optics	Lumens (lm)	Efficacy (lm/W)	CRI	Voltage
CDXSWM	Up	7W	7.0W	2700K	25°	565	80.7	94	120-277V 0-10V & 120V Triac dimming
				3000K		577	82.4	95	
				3500K		595	85.0	96	
				4000K		607	86.7	96	
				5000K		607	86.7	93	
	Down	7W	7.0W	2700K		565	80.7	94	
				3000K		577	82.4	95	
				3500K		595	85.0	96	
				4000K		607	86.7	96	
				5000K		607	86.7	93	
	Up	7W	7.0W	2700K	30°	542	77.4	94	
				3000K		554	79.1	95	
				3500K		572	81.7	96	
				4000K		583	83.3	96	
				5000K		583	83.3	93	
	Down	7W	7.0W	2700K		542	77.4	94	
				3000K		554	79.1	95	
				3500K		572	81.7	96	
				4000K		583	83.3	96	
				5000K		583	83.3	93	
	Up	7W	7.0W	2700K	45°	492	70.3	94	
				3000K		503	71.9	95	
				3500K		519	74.1	96	
				4000K		529	75.6	96	
				5000K		529	75.6	93	
	Down	7W	7.0W	2700K		492	70.3	94	
				3000K		503	71.9	95	
				3500K		519	74.1	96	
				4000K		529	75.6	96	
				5000K		529	75.6	93	
	Up	7W	7.0W	2700K	WW	565	80.7	94	
				3000K		577	82.4	95	
				3500K		595	85.0	96	
				4000K		607	86.7	96	
				5000K		607	86.7	93	
	Down	7W	7.0W	2700K		565	80.7	94	
				3000K		577	82.4	95	
				3500K		595	85.0	96	
				4000K		607	86.7	96	
				5000K		607	86.7	93	

CDX Field-Adjustable Cylinders

PERFORMANCE *(cont'd)*

CDX SMALL WALL MOUNT *(cont'd)*

Model	Direction	Wattage	Input Wattage	Color Temp.	Optics	Lumens (lm)	Efficacy (lm/W)	CRI	Voltage
CDXSWM	Up	11W	11.0W	2700K	25°	940	85.5	94	120-277V 0-10V & 120V Triac dimming
				3000K		961	87.4	95	
				3500K		992	90.2	96	
				4000K		1,011	91.9	96	
				5000K		1,011	91.9	95	
	Down	11W	11.0W	2700K		940	85.5	94	
				3000K		961	87.4	95	
				3500K		992	90.2	96	
				4000K		1,011	91.9	96	
				5000K		1,011	91.9	95	
	Up	11W	11.0W	2700K	30°	904	82.2	94	
				3000K		924	84.0	95	
				3500K		954	86.7	96	
				4000K		972	88.4	96	
				5000K		972	88.4	95	
	Down	11W	11.0W	2700K		904	82.2	94	
				3000K		924	84.0	95	
				3500K		954	86.7	96	
				4000K		972	88.4	96	
				5000K		972	88.4	95	
	Up	11W	11.0W	2700K	45°	823	74.8	94	
				3000K		841	76.5	95	
				3500K		870	79.1	96	
				4000K		885	80.5	96	
				5000K		885	80.5	95	
	Down	11W	11.0W	2700K		823	74.8	94	
				3000K		841	76.5	95	
				3500K		870	79.1	96	
				4000K		885	80.5	96	
				5000K		885	80.5	95	
	Up	11W	11.3W	2700K	WW	937	82.9	94	
			11.2W	3000K		959	85.6	95	
			11.0W	3500K		988	89.8	96	
			11.0W	4000K		1,008	91.6	96	
			11.3W	5000K		1,019	90.2	93	
	Down	11W	11.0W	2700K		937	85.2	94	
				3000K		959	87.2	95	
				3500K		988	89.8	96	
				4000K		1,008	91.6	96	
				5000K		1,019	92.6	93	

CDX Field-Adjustable Cylinders

PERFORMANCE *(cont'd)*

CDX SMALL WALL MOUNT *(cont'd)*

Model	Direction	Wattage	Input Wattage	Color Temp.	Optics	Lumens (lm)	Efficacy (lm/W)	CRI	Voltage
CDXSWM	Up/Down	13W	12.2W	2700K	25°	1,143	93.7	94	120-277V 0-10V & 120V Triac dimming
				3000K		1,169	95.8	95	
				3500K		1,209	99.1	96	
				4000K		1,229	100.7	96	
				5000K		1,229	100.7	95	
	Up/Down	13W	12.2W	2700K	30°	1,100	90.2		
				3000K		1,124	92.1	95	
				3500K		1,163	95.3	96	
				4000K		1,182	96.9	96	
				5000K		1,182	96.9	95	
	Up/Down	13W	12.2W	2700K	45°	1,001	82.0	94	
				3000K		1,023	83.9	95	
				3500K		1,058	86.7	96	
				4000K		1,076	88.2	96	
				5000K		1,076	88.2	95	
	Up/Down	13W	12.2W	2700K		WW	1,140	93.4	
				3000K		1,166	95.6	95	
				3500K		1,203	98.6	96	
				4000K		1,226	100.5	96	
				5000K		1,226	100.5	95	

CDX SMALL PENDANT MOUNT

Model	Direction	Wattage	Input Wattage	Color Temp.	Optics	Lumens (lm)	Efficacy (lm/W)	CRI	Voltage
CDXSP	Down	7W	7.0W	2700K	25°	565	80.7	94	120-277V 0-10V & 120V Triac dimming
				3000K		577	82.4	95	
				3500K		595	85.0	96	
				4000K		607	86.7	96	
				5000K		607	86.7	93	
	Down	7W	7.0W	2700K	30°	542	77.4	94	
				3000K		554	79.1	95	
				3500K		572	81.7	96	
				4000K		583	83.3	96	
				5000K		583	83.3	93	
	Down	7W	7.0W	2700K	45°	492	70.3	94	
				3000K		503	71.9	95	
				3500K		519	74.1	96	
				4000K		529	75.6	96	
				5000K		529	75.6	93	
	Up	7W	7.2W	2700K	-	484	67.2	92	
				3000K		506	70.3	93	
				3500K		536	74.4	95	
				4000K		554	76.9	95	
				5000K		549	76.3	93	

CDX Field-Adjustable Cylinders

PERFORMANCE *(cont'd)*

CDX SMALL PENDANT MOUNT *(cont'd)*

Model	Direction	Wattage	Input Wattage	Color Temp.	Optics	Lumens (lm)	Efficacy (lm/W)	CRI	Voltage
CDXSP	Down	11W	11.0W	2700K	25°	940	85.5	94	120-277V 0-10V & 120V Triac dimming
				3000K		961	87.4	95	
				3500K		992	90.2	96	
				4000K		1,011	91.9	96	
				5000K		1,011	91.9	95	
	Down	11W	11.0W	2700K	30°	904	82.2	94	
				3000K		924	84.0	95	
				3500K		954	86.7	96	
				4000K		972	88.4	96	
				5000K		972	88.4	95	
	Down	11W	11.0W	2700K	45°	823	74.8	94	
				3000K		841	76.5	95	
				3500K		870	79.1	96	
				4000K		885	80.5	96	
				5000K		885	80.5	95	
	Up	11W	11.5W	2700K	-	776	67.5	92	
			11.4W	3000K		811	71.1	93	
			11.2W	3500K		860	76.8	95	
			11.2W	4000K		888	79.3	95	
			11.5W	5000K		880	76.5	93	
	Up/Down	13W	12.2W	2700K	25°	1,053	86.3	94	
				3000K		1,077	88.3	95	
				3500K		1,111	91.1	96	
				4000K		1,133	92.9	96	
				5000K		1,133	92.9	95	
	Up/Down	13W	12.2W	2700K	30°	1,027	84.2	94	
				3000K		1,050	86.1	95	
				3500K		1,084	88.9	96	
				4000K		1,104	90.5	96	
				5000K		1,104	90.5	95	
	Up/Down	13W	12.2W	2700K	45°	967	79.3	94	
				3000K		989	81.1	95	
				3500K		1,020	83.6	96	
				4000K		1,040	85.2	96	
				5000K		1,040	85.2	95	

CDX Field-Adjustable Cylinders

PERFORMANCE *(cont'd)*

CDX SMALL SURFACE MOUNT

Model	Direction	Wattage	Input Wattage	Color Temp.	Optics	Lumens (lm)	Efficacy (lm/W)	CRI	Voltage
CDXS	Down	2W	1.9W	2700K	25°	105	55.3	94	120-277V 0-10V & 120V Triac dimming
				3000K		107	56.3	95	
				3500K		111	58.4	96	
				4000K		113	59.5	96	
				5000K		113	59.5	95	
	Down	2W	1.9W	2700K	30°	101	53.2	94	
				3000K		104	54.7	95	
				3500K		107	56.3	96	
				4000K		109	57.4	96	
				5000K		109	57.4	95	
	Down	2W	1.9W	2700K	45°	92	48.4	94	
				3000K		94	49.5	95	
				3500K		97	51.1	96	
				4000K		99	52.1	96	
				5000K		99	52.1	95	
	Down	3W	3.2W	2700K	25°	223	69.7	94	
				3000K		228	71.3	95	
				3500K		235	73.4	96	
				4000K		240	75.0	96	
				5000K		240	75.0	95	
	Down	3W	3.2W	2700K	30°	214	66.9	94	
				3000K		219	68.4	95	
				3500K		226	70.6	96	
				4000K		230	71.9	96	
				5000K		230	71.9	95	
	Down	3W	3.2W	2700K	45°	195	60.9	94	
				3000K		200	62.5	95	
				3500K		206	64.4	96	
				4000K		210	65.6	96	
				5000K		210	65.6	95	
	Down	5W	5.1W	2700K	25°	392	76.9	94	
				3000K		400	78.4	95	
				3500K		413	81.0	96	
				4000K		421	82.5	96	
				5000K		421	82.5	95	
	Down	5W	5.1W	2700K	30°	376	73.7	94	
				3000K		384	75.3	95	
				3500K		396	77.6	96	
				4000K		404	79.2	96	
				5000K		404	79.2	95	
	Down	5W	5.1W	2700K	45°	342	67.1	94	
				3000K		350	68.6	95	
				3500K		361	70.8	96	
				4000K		368	72.2	96	
				5000K		368	72.2	95	

PERFORMANCE *(cont'd)*

CDX SMALL SURFACE MOUNT *(cont'd)*

Model	Direction	Wattage	Input Wattage	Color Temp.	Optics	Lumens (lm)	Efficacy (lm/W)	CRI	Voltage
CDXS	Down	7W	7.0W	2700K	25°	565	80.7	94	120-277V 0-10V & 120V Triac dimming
				3000K		577	82.4	95	
				3500K		595	85.0	96	
				4000K		607	86.7	96	
				5000K		607	86.7	95	
	Down	7W	7.0W	2700K	30°	542	77.4	94	
				3000K		554	79.1	95	
				3500K		572	81.7	96	
				4000K		583	83.3	96	
				5000K		583	83.3	95	
	Down	7W	7.0W	2700K	45°	492	70.3	94	
				3000K		503	71.9	95	
				3500K		519	74.1	96	
				4000K		529	75.6	96	
				5000K		529	75.6	95	
	Down	11W	11.0W	2700K	25°	940	85.5	94	
				3000K		961	87.4	95	
				3500K		992	90.2	96	
				4000K		1,011	91.9	96	
				5000K		1,011	91.9	95	
	Down	11W	11.0W	2700K	30°	904	82.2	94	
				3000K		924	84.0	95	
				3500K		954	86.7	96	
				4000K		972	88.4	96	
				5000K		972	88.4	95	
	Down	11W	11.2W	2700K	45°	823	73.5	94	
			11.1W	3000K		841	75.8	95	
			11.0W	3500K		870	79.1	96	
			11.0W	4000K		885	80.5	96	
			11.2W	5000K		885	79.0	95	

PERFORMANCE *(cont'd)*

CDX MEDIUM WALL MOUNT

Model	Direction	Wattage	Input Wattage	Color Temp.	Optics	Lumens (lm)	Efficacy (lm/W)	CRI	Voltage
CDXMWM	Up	9W	9.2W	2700K	25°	941	102.3	91	120-277V 0-10V & 120V Triac dimming
				3000K		982	106.7	93	
				3500K		1,027	111.6	94	
				4000K		1,040	113.0	94	
				5000K		993	107.9	91	
	Down	9W	9.2W	2700K		941	102.3	91	
				3000K		982	106.7	93	
				3500K		1,027	111.6	94	
				4000K		1,040	113.0	94	
				5000K		993	107.9	91	
	Up	9W	9.2W	2700K	50°	893	97.1	91	
				3000K		931	101.2	93	
				3500K		975	106.0	94	
				4000K		987	107.3	94	
				5000K		942	102.4	91	
	Down	9W	9.2W	2700K		893	97.1	91	
				3000K		931	101.2	93	
				3500K		975	106.0	94	
				4000K		987	107.3	94	
				5000K		942	102.4	91	
	Up	9W	9.2W	2700K	55°	859	93.4	91	
				3000K		896	97.4	93	
				3500K		937	101.8	94	
				4000K		949	103.2	94	
				5000K		906	98.5	91	
	Down	9W	9.2W	2700K		859	93.4	91	
				3000K		896	97.4	93	
				3500K		937	101.8	94	
				4000K		949	103.2	94	
				5000K		906	98.5	91	
	Up	9W	8.9W	2700K	WW	882	99.1	91	
				3000K		920	103.4	93	
				3500K		963	108.2	94	
				4000K		975	109.6	94	
				5000K		931	104.6	91	
	Down	9W	9.2W	2700K		882	95.9	91	
				3000K		920	100.0	93	
				3500K		963	104.7	94	
				4000K		975	106.0	94	
				5000K		931	101.2	91	

PERFORMANCE *(cont'd)*

CDX MEDIUM WALL MOUNT *(cont'd)*

Model	Direction	Wattage	Input Wattage	Color Temp.	Optics	Lumens (lm)	Efficacy (lm/W)	CRI	Voltage
CDXMWM	Up	15W	15.1W	2700K	25°	1,540	102.0	91	120-277V 0-10V & 120V Triac dimming
				3000K		1,606	106.4	93	
				3500K		1,681	111.3	94	
				4000K		1,702	112.7	94	
				5000K		1,625	107.6	91	
	Down	15W	15.1W	2700K		1,540	102.0	91	
				3000K		1,606	106.4	93	
				3500K		1,681	111.3	94	
				4000K		1,702	112.7	94	
				5000K		1,625	107.6	91	
	Up	15W	15.1W	2700K	50°	1,462	96.8	91	
				3000K		1,525	101.0	93	
				3500K		1,596	105.7	94	
				4000K		1,616	107.0	94	
				5000K		1,543	102.2	91	
	Down	15W	15.1W	2700K		1,462	96.8	91	
				3000K		1,525	101.0	93	
				3500K		1,596	105.7	94	
				4000K		1,616	107.0	94	
				5000K		1,543	102.2	91	
	Up	15W	15.1W	2700K	55°	1,410	93.4	91	
				3000K		1,460	96.7	93	
				3500K		1,533	101.5	94	
				4000K		1,549	102.6	94	
				5000K		1,484	98.3	91	
	Down	15W	15.1W	2700K		1,410	93.4	91	
				3000K		1,460	96.7	93	
				3500K		1,533	101.5	94	
				4000K		1,549	102.6	94	
				5000K		1,484	98.3	91	
	Up	15W	15.4W	2700K	WW	1,451	94.2	91	
			15.2W	3000K		1,518	99.9	93	
			14.7W	3500K		1,579	107.4	94	
			14.6W	4000K		1,598	109.5	94	
			15.2W	5000K		1,542	101.4	91	
	Down	15W	14.6W	2700K		1,451	99.4	91	
				3000K		1,518	104.0	93	
				3500K		1,579	108.2	94	
				4000K		1,598	109.5	94	
				5000K		1,542	105.6	91	

PERFORMANCE *(cont'd)*

CDX MEDIUM WALL MOUNT *(cont'd)*

Model	Direction	Wattage	Input Wattage	Color Temp.	Optics	Lumens (lm)	Efficacy (lm/W)	CRI	Voltage
CDXMWM	Up/Down	17W	16.4W	2700K	25°	1,728	105.4	91	120-277V 0-10V & 120V Triac dimming
				3000K		1,802	109.9	93	
				3500K		1,886	115.0	94	
				4000K		1,909	116.4	94	
				5000K		1,823	111.2	91	
	Up/Down	17W	16.4W	2700K	50°	1,640	100.0	91	
				3000K		1,710	104.3	93	
				3500K		1,790	109.1	94	
				4000K		1,812	110.5	94	
				5000K		1,730	105.5	91	
	Up/Down	17W	16.4W	2700K	55°	1,572	95.9	91	
				3000K		1,639	99.9	93	
				3500K		1,716	104.6	94	
				4000K		1,737	105.9	94	
				5000K		1,658	101.1	91	
	Up/Down	17W	16.4W	2700K	WW	1,622	98.9	91	
				3000K		1,691	103.1	93	
				3500K		1,770	107.9	94	
				4000K		1,792	109.3	94	
				5000K		1,711	104.3	91	

CDX MEDIUM PENDANT MOUNT

Model	Direction	Wattage	Input Wattage	Color Temp.	Optics	Lumens (lm)	Efficacy (lm/W)	CRI	Voltage
CDXMP	Down	9W	9.2W	2700K	25°	941	102.3	91	120-277V 0-10V & 120V Triac dimming
				3000K		982	106.7	93	
				3500K		1,027	111.6	94	
				4000K		1,040	113.0	94	
				5000K		993	107.9	91	
	Down	9W	9.2W	2700K	50°	893	97.1	91	
				3000K		931	101.2	93	
				3500K		975	106.0	94	
				4000K		987	107.3	94	
				5000K		942	102.4	91	
	Down	9W	9.2W	2700K	55°	859	93.4	91	
				3000K		896	97.4	93	
				3500K		937	101.8	94	
				4000K		949	103.2	94	
				5000K		906	98.5	91	
	Up	9W	8.7W	2700K	—	655	75.3	93	
				3000K		677	77.8	94	
				3500K		716	82.3	95	
				4000K		734	84.4	95	
				5000K		741	85.2	93	

PERFORMANCE *(cont'd)*

CDX MEDIUM PENDANT MOUNT *(cont'd)*

Model	Direction	Wattage	Input Wattage	Color Temp.	Optics	Lumens (lm)	Efficacy (lm/W)	CRI	Voltage
CDXMP	Down	15W	15.1W	2700K	25°	1,540	102.0	91	120/277V 0/10V & 120V Triac dimming
				3000K		1,606	106.4	93	
				3500K		1,681	111.3	94	
				4000K		1,702	112.7	94	
				5000K		1,625	107.6	91	
	Down	15W	15.1W	2700K	50°	1,462	96.8	91	
				3000K		1,525	101.0	93	
				3500K		1,596	105.7	94	
				4000K		1,616	107.0	94	
				5000K		1,543	102.2	91	
	Down	15W	15.1W	2700K	55°	1,410	93.4	91	
				3000K		1,460	96.7	93	
				3500K		1,533	101.5	94	
				4000K		1,549	102.6	94	
				5000K		1,484	98.3	91	
	Up	15W	14.3W	2700K	—	1,078	75.4	93	
			14.1W	3000K		1,112	78.9	94	
			14.0W	3500K		1,176	84.0	95	
			13.9W	4000K		1,204	86.6	95	
			14.3W	5000K		1,225	85.7	93	
	Up/Down	17W	16.0W	2700K	25°	1,454	90.9	91	
				3000K		1,515	94.7	93	
				3500K		1,586	99.1	94	
				4000K		1,606	100.4	95	
				5000K		1,534	95.9	91	
	Up/Down	17W	16.0W	2700K	50°	1,425	89.1	91	
				3000K		1,486	92.9	93	
				3500K		1,555	97.2	94	
				4000K		1,574	98.4	95	
				5000K		1,503	93.9	91	
	Up/Down	17W	16.0W	2700K	55°	1,402	87.6	91	
				3000K		1,462	91.4	93	
				3500K		1,530	95.6	94	
				4000K		1,549	96.8	95	
				5000K		1,479	92.4	91	

CDX Field-Adjustable Cylinders

RAB

CDX MEDIUM PENDANT MOUNT

PERFORMANCE *(cont'd)*

CDX MEDIUM SURFACE MOUNT

Model	Direction	Wattage	Input Wattage	Color Temp.	Optics	Lumens (lm)	Efficacy (lm/W)	CRI	Voltage
CDXM	Down	2W	2.4W	2700K	25°	188	78.3	91	120-277V 0-10V & 120V Triac dimming
				3000K		196	81.7	93	
				3500K		205	85.4	94	
				4000K		208	86.7	95	
				5000K		199	82.9	92	
	Down	2W	2.4W	2700K	50°	178	74.2	91	
				3000K		186	77.5	93	
				3500K		195	81.3	94	
				4000K		197	82.1	95	
				5000K		188	78.3	92	
	Down	2W	2.4W	2700K	55°	171	71.3	91	
				3000K		178	74.2	93	
				3500K		187	77.9	94	
				4000K		189	78.8	95	
				5000K		180	75.0	92	
	Down	4W	4.2W	2700K	25°	390	92.9	91	
				3000K		407	96.9	93	
				3500K		426	101.4	94	
				4000K		431	102.6	95	
				5000K		411	97.9	92	
	Down	4W	4.2W	2700K	50°	370	88.1	91	
				3000K		386	91.9	93	
				3500K		404	96.2	94	
				4000K		409	97.4	95	
				5000K		390	92.9	92	
	Down	4W	4.2W	2700K	55°	355	84.5	91	
				3000K		370	88.1	93	
				3500K		387	92.1	94	
				4000K		392	93.3	95	
				5000K		374	89.0	92	
	Down	7W	6.8W	2700K	25°	667	98.1	91	
				3000K		696	102.4	93	
				3500K		728	107.1	94	
				4000K		737	108.4	95	
				5000K		704	103.5	92	
	Down	7W	6.8W	2700K	50°	634	93.2	91	
				3000K		661	97.2	93	
				3500K		691	101.6	94	
				4000K		700	102.9	95	
				5000K		668	98.2	92	
	Down	7W	6.8W	2700K	55°	606	89.1	91	
				3000K		632	92.9	93	
				3500K		662	97.4	94	
				4000K		670	98.5	95	
				5000K		640	94.1	92	

CDX Field-Adjustable Cylinders

PERFORMANCE *(cont'd)*

CDX MEDIUM SURFACE MOUNT *(cont'd)*

Model	Direction	Wattage	Input Wattage	Color Temp.	Optics	Lumens (lm)	Efficacy (lm/W)	CRI	Voltage
CDXM	Down	9W	9.2W	2700K	25°	941	102.3	91	120-277V 0-10V & 120V Triac dimming
				3000K		982	106.7	93	
				3500K		1,027	111.6	94	
				4000K		1,040	113.0	94	
				5000K		993	107.9	92	
	Down	9W	9.2W	2700K	50°	893	97.1	91	
				3000K		931	101.2	93	
				3500K		975	106.0	94	
				4000K		987	107.3	94	
				5000K		942	102.4	92	
	Down	9W	9.2W	2700K	55°	859	93.4	91	
				3000K		896	97.4	93	
				3500K		937	101.8	94	
				4000K		949	103.2	95	
				5000K		906	98.5	92	
	Down	15W	15.1W	2700K	25°	1,540	102.0	91	
				3000K		1,606	106.4	93	
				3500K		1,681	111.3	94	
				4000K		1,702	112.7	94	
				5000K		1,625	107.6	92	
	Down	15W	15.1W	2700K	50°	1,462	96.8	91	
				3000K		1,525	101.0	93	
				3500K		1,596	105.7	94	
				4000K		1,616	107.0	94	
				5000K		1,543	102.2	92	
	Down	15W	16.0W	2700K	55°	1,410	88.1	91	
			15.6W	3000K		1,460	93.6	93	
			15.2W	3500K		1,533	100.9	94	
			15.1W	4000K		1,549	102.6	94	
			15.7W	5000K		1,484	94.5	92	

CDX Field-Adjustable Cylinders

PERFORMANCE *(cont'd)*

CDX LARGE WALL MOUNT

Model	Direction	Wattage	Input Wattage	Color Temp.	Optics	Lumens (lm)	Efficacy (lm/W)	CRI	Voltage
CDXLWM	Up	18W	18.0W	2700K	40°	1,948	108.2	91	120-277V 0-10V & 120V Triac dimming
				3000K		2,032	112.9	93	
				3500K		2,127	118.2	94	
				4000K		2,153	119.6	95	
				5000K		2,056	114.2	92	
	Down	18W	18.0W	2700K		1,948	108.2	91	
				3000K		2,032	112.9	93	
				3500K		2,127	118.2	94	
				4000K		2,153	119.6	95	
				5000K		2,056	114.2	92	
	Up	18W	18.0W	2700K	55°	1,867	103.7	91	
				3000K		1,947	108.2	93	
				3500K		2,038	113.2	94	
				4000K		2,063	114.6	95	
				5000K		1,970	109.4	92	
	Down	18W	18.0W	2700K		1,867	103.7	91	
				3000K		1,947	108.2	93	
				3500K		2,038	113.2	94	
				4000K		2,063	114.6	95	
				5000K		1,970	109.4	92	
	Up	18W	18.0W	2700K	75°	1,758	97.7	91	
				3000K		1,834	101.9	93	
				3500K		1,919	106.6	94	
				4000K		1,943	107.9	95	
				5000K		1,855	103.1	92	
	Down	18W	18.0W	2700K		1,758	97.7	91	
				3000K		1,834	101.9	93	
				3500K		1,919	106.6	94	
				4000K		1,943	107.9	95	
				5000K		1,855	103.1	92	
	Up	18W	18.0W	2700K	WW	1,977	109.8	91	
				3000K		2,061	114.5	93	
				3500K		2,157	119.8	94	
				4000K		2,184	121.3	95	
				5000K		2,085	115.8	92	
	Down	18W	18.0W	2700K		1,977	109.8	91	
				3000K		2,061	114.5	93	
				3500K		2,157	119.8	94	
				4000K		2,184	121.3	95	
				5000K		2,085	115.8	92	

CDX Field-Adjustable Cylinders

PERFORMANCE *(cont'd)*

CDX LARGE WALL MOUNT *(cont'd)*

Model	Direction	Wattage	Input Wattage	Color Temp.	Optics	Lumens (lm)	Efficacy (lm/W)	CRI	Voltage
CDXLWM	Up	30W	30.1W	2700K	40°	3,142	104.4	92	120-277V 0-10V & 120V Triac dimming
				3000K		3,277	108.9	93	
				3500K		3,429	113.9	94	
				4000K		3,472	115.3	94	
				5000K		3,315	110.1	92	
	Down	30W	28.9W	2700K		3,142	108.7	92	
				3000K		3,277	113.4	93	
				3500K		3,429	118.7	94	
				4000K		3,472	120.1	94	
				5000K		3,315	114.7	92	
	Up	30W	30.1W	2700K	55°	3,012	100.1	92	
				3000K		3,141	104.4	93	
				3500K		3,287	109.2	94	
				4000K		3,328	110.6	94	
				5000K		3,177	105.5	92	
	Down	30W	28.9W	2700K		3,012	104.2	92	
				3000K		3,141	108.7	93	
				3500K		3,287	113.7	94	
				4000K		3,328	115.2	94	
				5000K		3,177	109.9	92	
	Up	30W	30.1W	2700K	75°	2,825	93.9	92	
				3000K		2,953	98.1	93	
				3500K		3,098	102.9	94	
				4000K		3,144	104.5	94	
				5000K		2,984	99.1	92	
	Down	30W	28.9W	2700K		2,825	97.8	92	
				3000K		2,953	102.2	93	
				3500K		3,098	107.2	94	
				4000K		3,144	108.8	94	
				5000K		2,984	103.3	92	
	Up	30W	32.0W	2700K	WW	3,147	98.3	91	
			31.4W	3000K		3,288	104.7	93	
			30.3W	3500K		3,443	113.6	94	
			30.1W	4000K		3,485	115.8	94	
			31.4W	5000K		3,299	105.1	92	
	Down	30W	30.1W	2700K		3,147	104.6	91	
				3000K		3,288	109.2	93	
				3500K		3,443	114.4	94	
				4000K		3,485	115.8	94	
				5000K		3,299	109.6	92	

PERFORMANCE *(cont'd)*

CDX LARGE WALL MOUNT *(cont'd)*

Model	Direction	Wattage	Input Wattage	Color Temp.	Optics	Lumens (lm)	Efficacy (lm/W)	CRI	Voltage
CDXLWM	Up/Down	33W	33.1W	2700K	40°	3,779	114.2	91	120-277V 0-10V & 120V Triac dimming
				3000K		3,942	119.1	93	
				3500K		4,126	124.7	94	
				4000K		4,177	126.2	95	
				5000K		3,989	120.5	92	
	Up/Down	33W	33.1W	2700K	55°	3,622	109.4	91	
				3000K		3,777	114.1	93	
				3500K		3,954	119.5	94	
				4000K		4,002	120.9	95	
				5000K		3,822	115.5	92	
	Up/Down	33W	33.1W	2700K	75°	3,411	103.1	91	
				3000K		3,558	107.5	93	
				3500K		3,723	112.5	94	
				4000K		3,800	114.8	95	
				5000K		3,599	108.7	92	
	Up/Down	33W	33.1W	2700K	WW	3,835	115.9	91	
				3000K		3,998	120.8	93	
				3500K		4,185	126.4	94	
				4000K		4,237	128.0	95	
				5000K		4,045	122.2	92	

CDX LARGE PENDANT MOUNT

Model	Direction	Wattage	Input Wattage	Color Temp.	Optics	Lumens (lm)	Efficacy (lm/W)	CRI	Voltage
CDXLP	Down	18W	18.0W	2700K	40°	1,948	108.2	91	120-277V 0-10V & 120V Triac dimming
				3000K		2,032	112.9	93	
				3500K		2,127	118.2	94	
				4000K		2,153	119.6	95	
				5000K		2,056	114.2	92	
	Down	18W	18.0W	2700K	55°	1,867	103.7	91	
				3000K		1,947	108.2	93	
				3500K		2,038	113.2	94	
				4000K		2,063	114.6	95	
				5000K		1,970	109.4	92	
	Down	18W	18.0W	2700K	75°	1,758	97.7	91	
				3000K		1,834	101.9	93	
				3500K		1,919	106.6	94	
				4000K		1,943	107.9	95	
				5000K		1,855	103.1	92	
	Up	18W	17.4W	2700K	—	1,487	85.5	92	
				3000K		1,539	88.4	94	
				3500K		1,625	93.4	95	
				4000K		1,667	95.8	95	
				5000K		1,684	96.8	92	

PERFORMANCE *(cont'd)*

CDX LARGE PENDANT MOUNT *(cont'd)*

Model	Direction	Wattage	Input Wattage	Color Temp.	Optics	Lumens (lm)	Efficacy (lm/W)	CRI	Voltage
CDXLP	Down	30W	28.9W	2700K	40°	3,142	108.7	92	120-277V 0-10V & 120V Triac dimming
				3000K		3,277	113.4	93	
				3500K		3,429	118.7	94	
				4000K		3,472	120.1	94	
				5000K		3,315	114.7	92	
	Down	30W	28.9W	2700K	55°	3,012	104.2	92	
				3000K		3,141	108.7	93	
				3500K		3,287	113.7	94	
				4000K		3,328	115.2	94	
				5000K		3,177	109.9	92	
	Down	30W	28.9W	2700K	75°	2,825	97.8	92	
				3000K		2,953	102.2	93	
				3500K		3,098	107.2	94	
				4000K		3,144	108.8	94	
				5000K		2,984	103.3	92	
	Up	30W	30.0W	2700K	—	2,384	79.5	92	
				3000K		2,474	92.0	94	
				3500K		2,610	90.0	95	
				4000K		2,684	92.9	95	
				5000K		2,693	89.8	92	
	Up/Down	33W	32.5W	2700K	40°	3,269	100.6	92	
				3000K		3,409	104.9	93	
				3500K		3,568	109.8	94	
				4000K		3,612	111.1	95	
				5000K		3,449	106.1	92	
	Up/Down	33W	32.5W	2700K	55°	3,200	98.5	92	
				3000K		3,337	102.7	93	
				3500K		3,493	107.5	94	
				4000K		3,536	108.8	95	
				5000K		3,376	103.9	92	
	Up/Down	33W	32.5W	2700K	75°	3,110	95.7	92	
				3000K		3,243	99.8	93	
				3500K		3,394	104.4	94	
				4000K		3,436	105.7	95	
				5000K		3,281	101.0	92	

PERFORMANCE *(cont'd)*

CDX LARGE SURFACE MOUNT

Model	Direction	Wattage	Input Wattage	Color Temp.	Optics	Lumens (lm)	Efficacy (lm/W)	CRI	Voltage
CDXL	Down	4W	4.0W	2700K	40°	386	96.5	92	120-277V 0-10V & 120V Triac dimming
				3000K		403	100.8	93	
				3500K		422	105.5	94	
				4000K		427	106.8	95	
				5000K		408	102.0	92	
	Down	4W	4.0W	2700K	55°	370	92.5	92	
				3000K		386	96.5	93	
				3500K		404	101.0	94	
				4000K		409	102.3	95	
				5000K		390	97.5	92	
	Down	4W	4.0W	2700K	75°	350	87.5	92	
				3000K		365	91.3	93	
				3500K		382	95.5	94	
				4000K		387	96.8	95	
				5000K		369	92.3	92	
	Down	8W	7.5W	2700K	40°	786	104.8	92	
				3000K		819	109.2	93	
				3500K		857	114.3	94	
				4000K		868	115.7	95	
				5000K		829	110.5	92	
	Down	8W	7.5W	2700K	55°	753	100.4	92	
				3000K		785	104.7	93	
				3500K		822	109.6	94	
				4000K		832	110.9	95	
				5000K		794	105.9	92	
	Down	8W	7.5W	2700K	75°	713	95.1	92	
				3000K		744	99.2	93	
				3500K		778	103.7	94	
				4000K		788	105.1	95	
				5000K		752	100.3	92	
	Down	13W	12.2W	2700K	40°	1,367	112.0	92	
				3000K		1,425	116.8	93	
				3500K		1,492	122.3	94	
				4000K		1,510	123.8	95	
				5000K		1,442	118.2	92	
	Down	13W	12.2W	2700K	55°	1,310	107.4	92	
				3000K		1,367	112.0	93	
				3500K		1,430	117.2	94	
				4000K		1,448	118.7	95	
				5000K		1,382	113.3	92	
	Down	13W	12.2W	2700K	75°	1,240	101.6	92	
				3000K		1,293	106.0	93	
				3500K		1,353	110.9	94	
				4000K		1,370	112.3	95	
				5000K		1,308	107.2	92	

PERFORMANCE *(cont'd)*

CDX LARGE SURFACE MOUNT *(cont'd)*

Model	Direction	Wattage	Input Wattage	Color Temp.	Optics	Lumens (lm)	Efficacy (lm/W)	CRI	Voltage
CDXL	Down	18W	17.1W	2700K	40°	1,948	113.9	92	120-277V 0-10V & 120V Triac dimming
				3000K		2,032	118.8	93	
				3500K		2,127	124.4	94	
				4000K		2,153	125.9	95	
				5000K		2,056	120.2	92	
	Down	18W	17.1W	2700K	55°	1,867	109.2	92	
				3000K		1,947	113.9	93	
				3500K		2,038	119.2	94	
				4000K		2,063	120.6	95	
				5000K		1,970	115.2	92	
	Down	18W	17.1W	2700K	75°	1,758	102.8	92	
				3000K		1,834	107.3	93	
				3500K		1,919	112.2	94	
				4000K		1,943	113.6	95	
				5000K		1,855	108.5	92	
	Down	30W	28.9W	2700K	40°	3,142	108.7	94	
				3000K		3,277	113.4	94	
				3500K		3,429	118.7	94	
				4000K		3,472	120.1	94	
				5000K		3,315	114.7	94	
	Down	30W	28.9W	2700K	55°	3,012	104.2	94	
				3000K		3,141	108.7	94	
				3500K		3,287	113.7	94	
				4000K		3,328	115.2	94	
				5000K		3,177	109.9	94	
	Down	30W	30.8W	2700K	75°	2,825	91.7	92	
			30.1W	3000K		2,953	98.1	93	
			29.1W	3500K		3,098	106.5	94	
			28.9W	4000K		3,144	108.8	94	
			30.2W	5000K		2,984	98.8	92	

CDX Field-Adjustable Cylinders

TECHNICAL SPECIFICATIONS

COMPLIANCE

UL Listed
Suitable for wet locations

IP Rating (Wall Mount Models)
Ingress protection rating of IP65 for dust and water

California Title 24 JA8 Compliant (Small size models only)
Can be used to conform with the requirements of California Title 24 Part 6.

CONSTRUCTION

Cold Weather Starting
Minimum starting temperature is -40°C (-40°F)

Cold Weather Starting w/ Battery Backup
Minimum starting temperature is 32°F (-0°C)

Maximum Ambient Temperature
Suitable for use in up to 104°F (40°C)

Maximum Ambient Temperature w/Battery Backup
Suitable for use in up to 140°F (60°C)

Housing
Die-cast aluminum housing

Mounting
Wall mount, pendant mount and surface mount options available

Lens
Outer lens: Glass
Inner upper lens material: Acrylic for wall mount models and frosted polycarbonate for the pendant mount models.
Inner adjustable lens material: Acrylic

Gasket
High temperature silicone

Green Technology
Mercury and UV free. RoHs-compliant components.

Finish
Formulated for high durability and long lasting color.

LED CHARACTERISTICS

LEDs
Long-life, high-efficacy, surface-mount LEDs

Color Temperature
CCT-adjustable: 2700/3000/3500/4000/5000K

Color Accuracy (CRI)
80+ CRI

R9 Value
High-color performance with R9 greater than 50

Color Stability
LED color temperature is warrantied to shift no more than 200K in color temperature over a 5-year period

Color Uniformity
RAB's range of Correlated Color Temperature follows the guidelines of the American National Standard for Specifications for the Chromaticity of Solid State Lighting (SSL) Products, ANSI C78.377-2024.

OPTICS

Light Distribution:

Models with wall mount options:
25°/30°/45°/WW
25°/50°/55°/WW
40°/55°/75°/WW

Models with pendant & surface mount options:
25°/30°/45°
25°/50°/55°
40°/55°/75°

FACTORY SETTINGS

Wattages:

Wall mount & pendant mount Models
CDXSWM and CDXSP: 13/11/7W (Default 13W)
CDXMWM and CDXMP: 17/15/9W (Default 17W)
CDXLWM and CDXLP: 33/30/18W (Default 33W)

Surface mount Models
CDXS: 11/7/5/3/2W (Default 11W)
CDXM: 15/9/7/4/2W (Default 15W)
CDXL: 30/18/13/8/4W (Default 30W)

CCT-Adjustable: 2700/3000/3500/4000/5000K (Default 4000K)

Adjustable Optics

Models with wall mount options:
25°/30°/45°/WW (Default 45°)
25°/50°/55°/WW (Default 50°)
40°/55°/75°/WW (Default 55°)

Models with pendant & surface mount options:
25°/30°/45° (Default 45°)
25°/50°/55° (Default 50°)
40°/55°/75° (Default 55°)

TECHNICAL SPECIFICATIONS *(cont'd)*

ELECTRICAL

Drivers

Constant Current, Class 2, 120-277V, 50/60Hz

CDXSWM
7W: 0.05A @120V, 0.04A @208V, 0.03A @277V, 0.03A @277V
11W: 0.09A @120V, 0.06A @208V, 0.05A @277V, 0.04A @277V
13W: 0.10A @120V, 0.06A @208V, 0.05A @277V, 0.04A @277V

CDXMWM
9W: 0.07A @120V, 0.05A @208V, 0.04A @277V, 0.04A @277V
15W: 0.12A @120V, 0.07A @208V, 0.06A @277V, 0.06A @277V
17W: 0.13A @120V, 0.08A @208V, 0.07A @277V, 0.06A @277V

CDXLWM
18W: 0.15A @120V, 0.09A @208V, 0.08A @277V, 0.07A @277V
30W: 0.26A @120V, 0.14A @208V, 0.12A @277V, 0.11A @277V
33W: 0.28A @120V, 0.16A @208V, 0.14A @277V, 0.12A @277V

CDXSP
7W: 0.05A @120V, 0.04A @208V, 0.03A @277V, 0.03A @277V
11W: 0.09A @120V, 0.06A @208V, 0.05A @277V, 0.04A @277V
13W: 0.10A @120V, 0.06A @208V, 0.05A @277V, 0.04A @277V

CDXMP
9W: 0.07A @120V, 0.05A @208V, 0.04A @277V, 0.04A @277V
15W: 0.12A @120V, 0.07A @208V, 0.06A @277V, 0.06A @277V
17W: 0.13A @120V, 0.08A @208V, 0.07A @277V, 0.06A @277V

CDXLP
18W: 0.15A @120V, 0.09A @208V, 0.08A @277V, 0.07A @277V
30W: 0.26A @120V, 0.14A @208V, 0.12A @277V, 0.11A @277V
33W: 0.27A @120V, 0.16A @208V, 0.14A @277V, 0.12A @277V

CDXS
2W: 0.02A @120V, 0.01A @208V, 0.01A @277V, 0.01A @277V
3W: 0.04A @120V, 0.03A @208V, 0.02A @277V, 0.02A @277V
5W: 0.05A @120V, 0.03A @208V, 0.03A @277V, 0.03A @277V
7W: 0.05A @120V, 0.04A @208V, 0.04A @277V, 0.03A @277V
11W: 0.09A @120V, 0.06A @208V, 0.05A @277V, 0.04A @277V

CDXM
2W: 0.03A @120V, 0.02A @208V, 0.01A @277V, 0.01A @277V
4W: 0.04A @120V, 0.03A @208V, 0.03A @277V, 0.02A @277V
7W: 0.05A @120V, 0.04A @208V, 0.03A @277V, 0.03A @277V
9W: 0.07A @120V, 0.05A @208V, 0.04A @277V, 0.04A @277V
15W: 0.12A @120V, 0.07A @208V, 0.06A @277V, 0.06A @277V

CDXL
4W: 0.05A @120V, 0.03A @208V, 0.03A @277V, 0.02A @277V
8W: 0.06A @120V, 0.05A @208V, 0.05A @277V, 0.04A @277V
13W: 0.10A @120V, 0.06A @208V, 0.06A @277V, 0.05A @277V
18W: 0.14A @120V, 0.09A @208V, 0.08A @277V, 0.07A @277V
30W: 0.24A @120V, 0.14A @208V, 0.12A @277V, 0.11A @277V

Dimming Driver:
Driver includes dimming control wiring for 0-10V dimming systems. Requires separate 0-10V DC dimming circuit. Dims down to 5%.

Surge Protection
2 kV L-L 2kV L/N-G

ELECTRICAL

Emergency Light Loss Factor:

CDXSWM / CDXSP
7W: 1.0
11W: 1.0
13W: 1.0

CDXMWM / CDXMP
9W: 1.0
15W: 1.0
17W: 1.0

CDXLWM / CDXLP
18W: 1.0
30W: 0.67
33W: 0.61

CDXS
2W: 1.0
3W: 1.0
5W: 1.0
7W: 1.0
11W: 1.0

CDXM
2W: 1.0
4W: 1.0
7W: 1.0
9W: 1.0
15W: 1.0

CDXL
4W: 1.0
8W: 1.0
13W: 1.0
18W: 1.0
30W: 0.67

OTHER

Warranty

The RAB 5-year, limited warranty covers light output, driver performance and paint finish. RAB's warranty is subject to all terms and conditions found at rablighting.com/warranty.

Lifespan
100,000-hour LED lifespan based on IES LM-80 results and TM-21 calculations

CDX Field-Adjustable Cylinders

DIMENSIONS

CDXSWM
Weight: 3.1 lbs

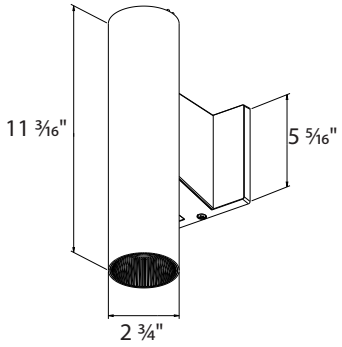

CDXSP
Weight: 3.13 lbs

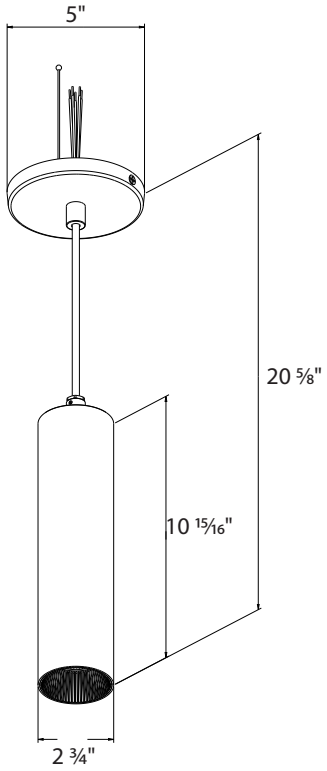

CDXS
Weight: 2.36 lbs

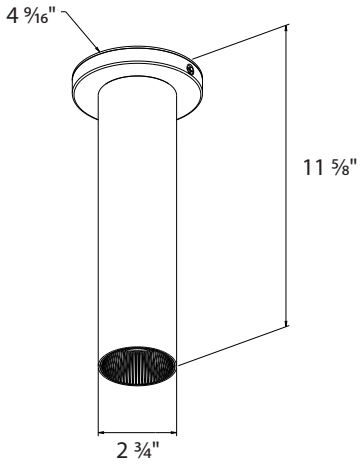

CDXMWM
Weight: 6.9 lbs

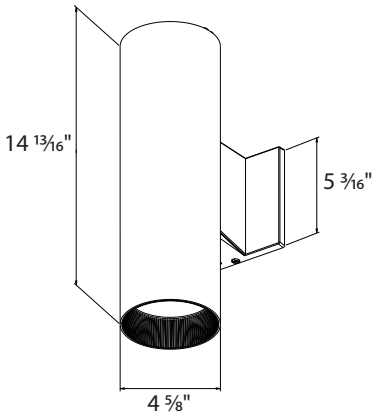

CDXMP
Weight: 6.13 lbs

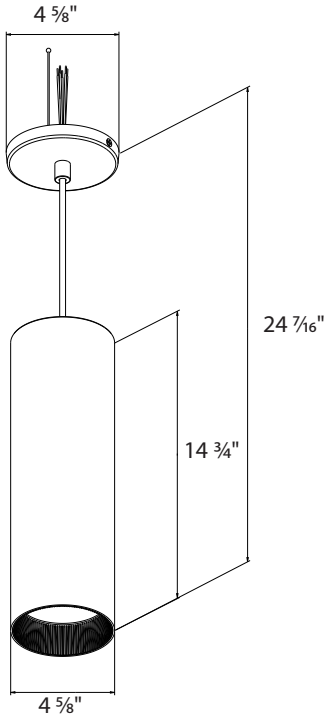

CDXM
Weight: 4.9 lbs

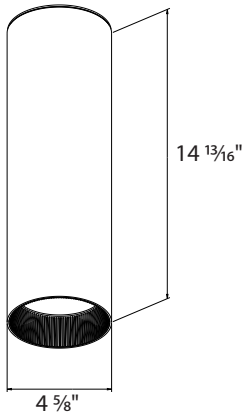

CDX Field-Adjustable Cylinders

DIMENSIONS *(cont'd)*

CDXLWM
Weight: 11.5 lbs

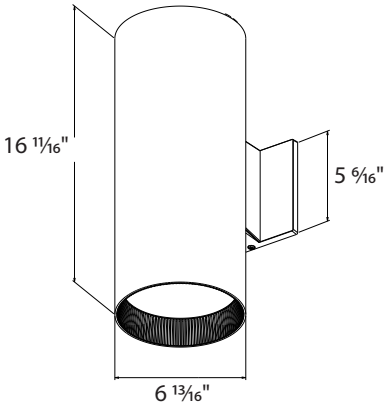

CDXLP
Weight: 10.3 lbs

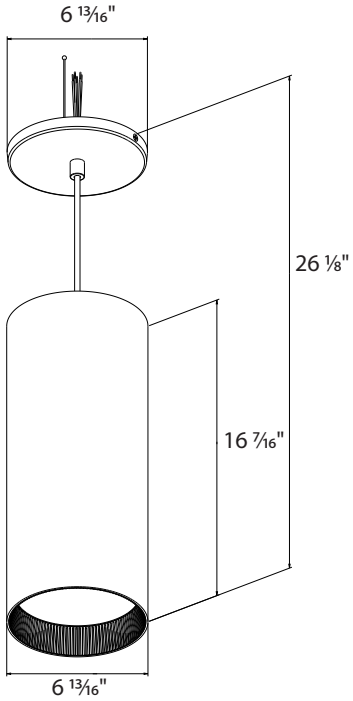

CDXL
Weight: 8.6 lbs

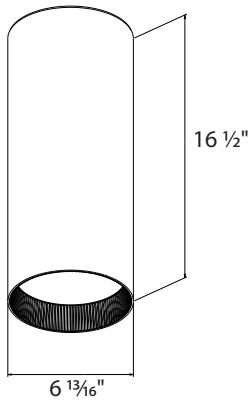

ORDERING MATRIX

CDX Field-Adjustable Cylinder (Wall Mount)

Family	Size /Wattage*	Mounting	Light Direction**	Color Temperature	Optics	Finish	Driver
CDX		WM					
	S Small, 13/17/7W M Medium, 17/15/9W L Large, 33/30/18W	WM Wall Mount	BLANK Selectable Down/Up/Both	BLANK CCT-Adjustable	BLANK 25°/30°/45°/WW For Small size only BLANK 25°/50°/55°/WW For Medium size only BLANK 40°/55°/75°/WW For Large size only	BLANK Matte Bronze W Matte White B Matte Black S Matte Silver	BLANK 120-277V

**Lower wattages are available for uplight-only or downlight-only operation. Uplight and downlight together run at the highest wattage only.*
***Optics are selectable on both the uplight and downlight, independently.*

CDX Field-Adjustable Cylinder (Pendant Mount)

Family	Size /Wattage*	Mounting	Light Direction**	Color Temperature	Optics	Finish	Driver
CDX		P					
	S Small, 13/17/7W M Medium, 17/15/9W L Large, 33/30/18W	P Pendant Mount	BLANK Selectable Down/Up/Both	BLANK CCT-Adjustable	BLANK 25°/30°/45° For Small size only BLANK 25°/50°/55° For Medium size only BLANK 40°/55°/75° For Large size only	BLANK Matte Bronze W Matte White B Matte Black S Matte Silver	BLANK 120-277V

**Lower wattages are available for uplight-only or downlight-only operation. Uplight and downlight together run at the highest wattage only.*
***Selectable optics apply to the downlight only. The uplight has a fixed beam angle.*

CDX Field-Adjustable Cylinders

ORDERING MATRIX *(cont'd)*

CDX Field-Adjustable Cylinder (Surface Mount)

Family	Size /Wattage	Mounting	Light Direction	Color Temperature	Optics	Finish	Driver
CDX							
	S Small, 11/7/5/3/2W **M** Medium, 15/9/7/4/2W **L** Large, 30/18/13/8/4W	**Blank** Surface Mount	**BLANK** Down Only	**BLANK** CCT-Adjustable	**BLANK** 25°/30°/45° For Small size only **BLANK** 25°/50°/55° For Medium size only **BLANK** 40°/55°/75° For Large size only	**BLANK** Matte Bronze **W** Matte White **B** Matte Black **S** Matte Silver	**BLANK** 120-277V