WL22 Adjustable Throw Wall Pack

WL22-S



WL22-M



WL22-L



PROJECT:

DATE:

TYPE:

PREPARED BY:

5 YEAR LIMITED WARRANTY

DLC LISTED PREMIUM

UL CERTIFIED

KEY FEATURES

- Field-adjustable wall pack, available in three different sizes::
  WL22-S: 30/25/15W (Default **30W**)
  WL22-M: 60/40/30W (Default **60W**) or 100/80/60W (Default **100W**)
  WL22-L: 150/120/100W (Default **150W**)
- Adjustable throw (45°/60°/90°)
- Field-adjustable **CCT**: 3000/4000/5000K (Default **4000K**)
- Standard selectable **photocell**
- **120-277V** & **480V**
- **0-10V** dimming
- Suitable for **wet** locations
- 5-Year, limited warranty

Wireless control with Lightcloud Blue

100,000 HOURS | ADJUSTABLE THROW | DIMMING | FIELD ADJUSTABLE | WET RATED | IP RATIED | IK04 RATED | LIGHTCLOUD BLUE

PERFORMANCE

Catalog Number	Adjustable Throw	Wattage	Lumens	Efficacy	Voltage Ratings	Color Temperature	L70 Lifespan
WL22-S	45°/60°/90°	30/25/15W	2,134 - 4,275	135.9 - 149.7	120-277V	CCT-Adjustable 3000/4000/5000K	100,000 Hrs
WL22-M		60/40/30W	4,818 - 9,326	143.0 - 165.1			
WL22-M		100/80/60W	9,307 - 15,758	145.1 - 169.5			
WL22-L		150/120/100W	15,070 - 23,261	141.8 - 166.0			
WL22-S/480	45°/60°/90°	30/25/15W	1,869 - 4,318	120.6 - 144.6	480V	CCT-Adjustable 3000/4000/5000K	100,000 Hrs
WL22-M/480		60/40/30W	4,172 - 9,661	143.9 - 161.9			
WL22-M/480		100/80/60W	9,554 - 15,607	145.9 - 163.7			
WL22-L/480		150/120/100W	15,026 - 23,340	143.5 - 166.6			

WL22 Adjustable Throw Wall Pack

PERFORMANCE

WL22-S-30	3000K	4000K	5000K	3000K	4000K	5000K	3000K	4000K	5000K
Optics	45°			45°			45°		
Wattage	30W			25W			15W		
Input Watts	29.3W	28.6W	29.3W	26.1W	25.5W	26.1W	15.7W	15.3W	15.7W
Lumens	3,981	4,155	4,125	3,558	3,714	3,687	2,134	2,227	2,211
Efficacy	135.9	145.3	140.8	136.3	145.6	141.3	135.9	145.6	140.8
CRI	81	84	82	81	84	82	81	84	82
Voltage Rating	120-277V								

WL22-S-30	3000K	4000K	5000K	3000K	4000K	5000K	3000K	4000K	5000K
Optics	60°			60°			60°		
Wattage	30W			25W			15W		
Input Watts	28.6W	28.1W	28.6W	25.5W	25.1W	25.5W	15.5W	15.2W	15.5W
Lumens	4,116	4,205	4,275	3,675	3,754	3,817	2,177	2,224	2,261
Efficacy	143.9	149.6	149.5	144.1	149.6	149.7	140.5	146.3	145.9
CRI	81	84	83	81	84	83	81	84	83
Voltage Rating	120-277V								

WL22-S-30	3000K	4000K	5000K	3000K	4000K	5000K	3000K	4000K	5000K
Optics	90°			90°			90°		
Wattage	30W			25W			15W		
Input Watts	29.3W	28.6W	29.3W	26.1W	25.5W	26.1W	15.7W	15.3W	15.7W
Lumens	4,085	4,258	4,238	3,661	3,816	3,798	2,196	2,289	2,278
Efficacy	139.4	148.9	144.6	140.3	149.6	145.5	139.9	149.6	145.1
CRI	82	84	82	82	84	82	81	84	82
Voltage Rating	120-277V								

WL22-S-30/480	3000K	4000K	5000K	3000K	4000K	5000K	3000K	4000K	5000K
Optics	45°			45°			45°		
Wattage	30W			25W			15W		
Input Watts	30.4W	29.7W	30.5W	25.9W	25.3W	26.0W	15.5W	15.1W	15.6W
Lumens	3,936	4,092	4,182	3,320	3,452	3,528	1,869	1,943	1,986
Efficacy	129.5	137.8	137.1	128.2	136.4	135.7	120.6	128.7	127.3
CRI	81	84	82	81	84	82	81	84	82
Voltage Rating	480V								

WL22 Adjustable Throw Wall Pack

PERFORMANCE

WL22-S-30/480	3000K	4000K	5000K	3000K	4000K	5000K	3000K	4000K	5000K
Optics	60°			60°			60°		
Wattage	30W			25W			15W		
Input Watts	29.7W	29.2W	29.7W	25.5W	25.1W	25.5W	15.3W	15.0W	15.3W
Lumens	4,087	4,169	4,292	3,452	3,521	3,625	1,913	1,951	2,009
Efficacy	137.6	142.8	144.5	135.4	140.3	142.2	125.0	130.1	131.3
CRI	81	84	83	81	84	83	82	84	83
Voltage Rating	480V								

WL22-S-30/480	3000K	4000K	5000K	3000K	4000K	5000K	3000K	4000K	5000K
Optics	90°			90°			90°		
Wattage	30W			25W			15W		
Input Watts	30.2W	29.7W	30.4W	25.9W	25.5W	26.1W	15.3W	15.0W	15.4W
Lumens	4,103	4,295	4,318	3,488	3,651	3,671	1,946	2,037	2,048
Efficacy	135.9	144.6	142.0	134.7	143.2	140.7	127.2	135.8	133.0
CRI	81	84	82	81	84	82	81	84	82
Voltage Rating	480V								

WL22-M-60	3000K	4000K	5000K	3000K	4000K	5000K	3000K	4000K	5000K
Optics	45°			45°			45°		
Wattage	60W			40W			30W		
Input Watts	60.9W	58.9W	61.0W	42.4W	41.0W	42.5W	32.3W	31.2W	32.4W
Lumens	8,710	9,064	9,000	6,254	6,508	6,462	4,818	5,014	4,979
Efficacy	143.0	153.9	147.5	147.5	158.7	152.0	149.2	160.7	153.7
CRI	81	83	81	81	83	81	81	83	81
Voltage Rating	120-277V								

WL22-M-60	3000K	4000K	5000K	3000K	4000K	5000K	3000K	4000K	5000K
Optics	60°			60°			60°		
Wattage	60W			40W			30W		
Input Watts	58.7W	57.4W	58.6W	41.2W	40.3W	41.1W	31.5W	30.8W	31.4W
Lumens	8,989	9,198	9,326	6,412	6,561	6,652	4,907	5,021	5,091
Efficacy	153.1	160.2	159.1	155.6	162.8	161.8	155.8	163.0	162.1
CRI	81	83	83	81	83	83	81	83	83
Voltage Rating	120-277V								

WL22 Adjustable Throw Wall Pack

PERFORMANCE

WL22-M-60	3000K	4000K	5000K	3000K	4000K	5000K	3000K	4000K	5000K
Optics	90°			90°			90°		
Wattage	60W			40W			30W		
Input Watts	60.7W	58.7W	60.6W	42.3W	40.9W	42.2W	32.2W	31.1W	32.1W
Lumens	8,887	9,281	9,231	6,393	6,677	6,640	4,917	5,135	5,107
Efficacy	146.4	158.1	152.3	151.1	163.3	157.3	152.7	165.1	159.1
CRI	81	83	81	81	83	81	81	83	81
Voltage Rating	120-277V								

WL22-M-60/480	3000K	4000K	5000K	3000K	4000K	5000K	3000K	4000K	5000K
Optics	45°			45°			45°		
Wattage	60W			40W			30W		
Input Watts	61.5W	59.9W	61.5W	40.0W	39.0W	40.0W	29.0W	28.2W	29.0W
Lumens	8,935	9,399	9,271	5,865	6,170	6,086	4,172	4,389	4,329
Efficacy	145.3	156.9	150.7	146.6	158.2	152.2	143.9	155.6	149.3
CRI	81	83	81	81	83	81	81	83	81
Voltage Rating	480V								

WL22-M-60/480	3000K	4000K	5000K	3000K	4000K	5000K	3000K	4000K	5000K
Optics	60°			60°			60°		
Wattage	60W			40W			30W		
Input Watts	59.9W	58.9W	59.9W	39.2W	38.5W	39.2W	28.3W	27.8W	28.3W
Lumens	9,298	9,538	9,661	6,026	6,182	6,261	4,212	4,321	4,376
Efficacy	155.2	161.9	161.3	153.7	160.6	159.7	148.8	155.4	154.6
CRI	81	83	82	81	83	82	81	83	82
Voltage Rating	480V								

WL22-M-60/480	3000K	4000K	5000K	3000K	4000K	5000K	3000K	4000K	5000K
Optics	90°			90°			90°		
Wattage	60W			40W			30W		
Input Watts	61.5W	59.9W	61.5W	40.0W	39.0W	40.0W	29.0W	28.2W	29.0W
Lumens	9,174	9,591	9,529	6,014	6,287	6,247	4,296	4,491	4,462
Efficacy	149.2	160.1	154.9	150.4	161.2	156.2	148.1	159.3	153.9
CRI	81	83	82	81	83	82	81	83	82
Voltage Rating	480V								

WL22 Adjustable Throw Wall Pack

PERFORMANCE

WL22-M-100	3000K	4000K	5000K	3000K	4000K	5000K	3000K	4000K	5000K
Optics	45°			45°			45°		
Wattage	100W			80W			60W		
Input Watts	100.5W	97.8W	100.6W	80.1W	77.9W	80.2W	60.1W	58.5W	60.2W
Lumens	14,586	15,503	15,226	12,028	12,784	12,555	9,307	9,892	9,715
Efficacy	145.1	158.5	151.4	150.2	164.1	156.5	154.9	169.1	161.4
CRI	81	83	82	81	83	82	81	83	82
Voltage Rating	120-277V								

WL22-M-100	3000K	4000K	5000K	3000K	4000K	5000K	3000K	4000K	5000K
Optics	60°			60°			60°		
Wattage	100W			80W			60W		
Input Watts	97.3W	95.6W	97.5W	78.1W	76.7W	78.3W	58.8W	57.8W	58.9W
Lumens	15,096	15,605	15,758	12,377	12,795	12,919	9,479	9,799	9,894
Efficacy	155.1	163.2	161.6	158.5	166.8	165.0	161.2	169.5	168.0
CRI	81	83	83	81	83	83	81	83	83
Voltage Rating	120-277V								

WL22-M-100	3000K	4000K	5000K	3000K	4000K	5000K	3000K	4000K	5000K
Optics	90°			90°			90°		
Wattage	100W			80W			60W		
Input Watts	100.4W	97.4W	100.6W	80.1W	77.7W	80.3W	60.1W	58.3W	60.2W
Lumens	14,680	15,470	15,304	12,113	12,765	12,628	9,379	9,884	9,778
Efficacy	146.2	158.8	152.1	151.2	164.3	157.3	156.1	169.5	162.4
CRI	81	83	82	81	83	82	81	83	82
Voltage Rating	120-277V								

WL22-M-100/480	3000K	4000K	5000K	3000K	4000K	5000K	3000K	4000K	5000K
Optics	45°			45°			45°		
Wattage	100W			80W			60W		
Input Watts	99.0W	96.7W	98.9W	80.2W	78.3W	80.1W	63.7W	62.2W	63.6W
Lumens	14,449	15,259	14,978	11,890	12,557	12,325	9,554	10,090	9,904
Efficacy	145.9	157.8	151.4	148.3	160.4	153.9	150.0	162.2	155.7
CRI	81	83	82	81	83	82	81	83	82
Voltage Rating	480V								

WL22 Adjustable Throw Wall Pack

PERFORMANCE

WL22-M-100/480	3000K	4000K	5000K	3000K	4000K	5000K	3000K	4000K	5000K
Optics	60°			60°			60°		
Wattage	100W			80W			60W		
Input Watts	96.7W	95.2W	96.7W	78.3W	77.1W	78.3W	62.6W	61.6W	62.6W
Lumens	15,040	15,496	15,607	12,251	12,622	12,713	9,788	10,085	10,157
Efficacy	155.5	162.8	161.4	156.5	163.7	162.4	156.4	163.7	162.3
CRI	81	83	82	81	83	82	81	83	82
Voltage Rating	480V								

WL22-M-100/480	3000K	4000K	5000K	3000K	4000K	5000K	3000K	4000K	5000K
Optics	90°			90°			90°		
Wattage	100W			80W			60W		
Input Watts	99.0W	96.7W	98.9W	80.2W	78.3W	80.1W	63.7W	62.2W	63.6W
Lumens	14,573	15,372	15,079	11,992	12,649	12,408	9,641	10,170	9,976
Efficacy	147.2	159.0	152.5	149.5	161.5	154.9	151.4	163.5	156.9
CRI	81	83	82	81	83	82	81	83	82
Voltage Rating	480V								

WL22-L-150	3000K	4000K	5000K	3000K	4000K	5000K	3000K	4000K	5000K
Optics	45°			45°			45°		
Wattage	150W			120W			100W		
Input Watts	151.2W	145.9W	150.5W	120.7W	116.5W	120.1W	101.3W	97.7W	100.8W
Lumens	21,439	22,331	22,181	17,569	18,300	18,177	15,070	15,697	15,592
Efficacy	141.8	153.1	147.4	145.6	157.1	151.3	148.8	160.7	154.7
CRI	80	83	82	81	83	82	81	83	82
Voltage Rating	120-277V								

WL22-L-150	3000K	4000K	5000K	3000K	4000K	5000K	3000K	4000K	5000K
Optics	60°			60°			60°		
Wattage	150W			120W			100W		
Input Watts	146.3W	143.2W	146.1W	117.5W	115.0W	117.3W	99.1W	97.0W	99.0W
Lumens	22,407	22,937	23,261	18,326	18,759	19,024	15,643	16,013	16,239
Efficacy	153.2	160.2	159.2	156.0	163.1	162.2	157.9	165.1	164.0
CRI	81	83	82	81	83	82	81	83	82
Voltage Rating	120-277V								

WL22 Adjustable Throw Wall Pack

PERFORMANCE

WL22-L-150	3000K	4000K	5000K	3000K	4000K	5000K	3000K	4000K	5000K
Optics	90°			90°			90°		
Wattage	150W			120W			100W		
Input Watts	151.4W	146.3W	149.6W	120.7W	116.6W	119.3W	101.3W	97.9W	100.1W
Lumens	22,318	23,197	22,700	18,226	18,944	18,538	15,631	16,247	15,899
Efficacy	147.4	158.6	151.7	151.0	162.5	155.4	154.3	166.0	158.8
CRI	80	83	82	81	83	82	81	83	82
Voltage Rating	120-277V								

WL22-L-150/480	3000K	4000K	5000K	3000K	4000K	5000K	3000K	4000K	5000K
Optics	45°			45°			45°		
Wattage	150W			120W			100W		
Input Watts	149.3W	144.8W	148.9W	116.7W	113.2W	116.4W	101.5W	98.4W	101.2W
Lumens	21,421	22,478	22,292	17,103	17,947	17,798	15,026	15,768	15,637
Efficacy	143.5	155.2	149.7	146.6	158.5	152.9	148.0	160.2	154.5
CRI	80	83	82	81	83	82	81	83	82
Voltage Rating	480V								

WL22-L-150/480	3000K	4000K	5000K	3000K	4000K	5000K	3000K	4000K	5000K
Optics	60°			60°			60°		
Wattage	150W			120W			100W		
Input Watts	145.0W	142.0W	144.7W	113.9W	111.5W	113.7W	99.3W	97.2W	99.1W
Lumens	22,539	23,048	23,340	17,817	18,219	18,451	15,584	15,936	16,138
Efficacy	155.4	162.3	161.3	156.4	163.4	162.3	156.9	164.0	162.8
CRI	81	83	83	81	83	83	81	83	83
Voltage Rating	480V								

WL22-L-150/480	3000K	4000K	5000K	3000K	4000K	5000K	3000K	4000K	5000K
Optics	90°			90°			90°		
Wattage	150W			120W			100W		
Input Watts	148.8W	144.9W	149.5W	116.5W	113.4W	117.0W	101.6W	98.9W	102.1W
Lumens	22,092	23,276	23,212	17,681	18,628	18,578	15,639	16,477	16,432
Efficacy	148.5	160.6	155.3	151.8	164.3	158.8	153.9	166.6	160.9
CRI	80	83	82	81	83	82	81	83	82
Voltage Rating	480V								

WL22 Adjustable Throw Wall Pack

TECHNICAL SPECIFICATIONS

COMPLIANCE

UL Listed
Suitable for wet locations

IP Rating
Ingress protection rating of IP65 for dust and water

IK Rating
IK04 rated for protection against impact

DLC Listed
This product family is listed with the DesignLights Consortium (DLC). Individual SKUs within this family may carry either a DLC Standard or DLC Premium qualification. Please refer to the individual product specification sheet or the DLC Qualified Products List (QPL) at designlights.org to confirm the qualification status of a specific SKU prior to specification or purchase.

LED CHARACTERISTICS

LEDs
Long-life, high-efficacy, surface-mount LEDs

Color Temperature
CCT-adjustable: 3000/4000/5000K

Default: 4000K

Color Accuracy (CRI)
80+ CRI

R9 Value
High-color performance with R9 greater than 50

Color Stability
LED color temperature is warrantied to shift no more than 200K in color temperature over a 5-year period

Color Uniformity
RAB's range of Correlated Color Temperature follows the guidelines of the American National Standard for Specifications for the Chromaticity of Solid State Lighting (SSL) Products, ANSI C78.377-2024.

CONSTRUCTION

Cold Weather Starting
Minimum starting temperature is -40°C (-40°F)

Cold Weather Starting w/ Battery Backup
Minimum starting temperature is -0°C (32°F)

Maximum Ambient Temperature
Suitable for use in up to 50°C (122°F)

Maximum Ambient Temperature w/Battery Backup
Suitable for use in up to 50°C (122°F)

Housing
Die-cast aluminum housing

Mounting
Surface mount for recessed junction box; 3 conduit entry points

Lens
Clear Glass

Gasket
High temperature silicone

Green Technology
Mercury and UV free. RoHs-compliant components.

Finish
Formulated for high durability and long lasting color.

OPTICAL

Bug Ratings:

Model#	Distribution (°)	BUG Rating	Voltage
WL22-S-30	45°	B0 U3 G3	120-277V
	60°	B0 U3 G3	
	90°	B0 U4 G3	
WL22-M-60	45°	B1 U4 G4	
	60°	B1 U5 G4	
	90°	B1 U5 G5	
WL22-M-100	45°	B1 U5 G5	
	60°	B1 U5 G5	
	90°	B1 U5 G5	
WL22-L-150	45°	B2 U5 G5	
	60°	B2 U5 G5	
	90°	B2 U5 G5	

Model#	Distribution (°)	BUG Rating	Voltage
WL22-S-30/480	45	B0 U3 G3	480V
	60	B0 U3 G3	
	90	B0 U4 G3	
WL22-M-60/480	45	B1 U4 G3	
	60	B1 U5 G4	
	90	B1 U5 G5	
WL22-M-100/480	45	B1 U5 G5	
	60	B1 U5 G5	
	90	B1 U5 G5	
WL22-L-150/480	45	B2 U5 G5	
	60	B2 U5 G5	
	90	B2 U5 G5	

TECHNICAL SPECIFICATIONS

ELECTRICAL

Drivers

WL22-S-30:

Constant Current, Class 1, 120-277V, 50/60Hz
30W: 0.30A @120V, 0.16A @208V, 0.14A @277V, 0.12A @277V
25W: 0.21A @120V, 0.12A @208V, 0.11A @277V, 0.10A @277V
15W: 0.13A @120V, 0.08A @208V, 0.07A @277V, 0.07A @277V

Constant Current, Class 1, 480V, 50/60Hz
30W: 0.07A @480V
25W: 0.06A @480V
15W: 0.05A @480V

WL22-M-100:

Constant Current, Class 1, 120-277V, 50/60Hz
100W: 1.00A @120V, 0.49A @208V, 0.43A @277V, 0.38A @277V
80W: 0.69A @120V, 0.39A @208V, 0.34A @277V, 0.31A @277V
60W: 0.52A @120V, 0.30A @208V, 0.27A @277V, 0.25A @277V

Constant Current, Class 1, 480V, 50/60Hz
100W: 0.23A @480V
80W: 0.16A @480V
60W: 0.13A @480V

WL22-M-60:
60W: 0.60A @120V, 0.30A @208V, 0.26A @277V, 0.23A @277V
40W: 0.34A @120V, 0.21A @208V, 0.19A @277V, 0.16A @277V
30W: 0.25A @120V, 0.16A @208V, 0.14A @277V, 0.13A @277V

Constant Current, Class 1, 480V, 50/60Hz
100W: 0.23A @480V
80W: 0.19A @480V
60W: 0.15A @480V

Constant Current, Class 1, 480V, 50/60Hz
60W: 0.13A @480V
40W: 0.09A @480V
30W: 0.07A @480V

WL22-L-150:

Constant Current, Class 1, 120-277V, 50/60Hz
150W: 1.50A @120V, 0.72A @208V, 064A @277V, 0.56A @277V
120W: 1.02A @120V, 0.59A @208V, 0.52A @277V, 0.47A @277V
100W: 0.85A @120V, 0.50A @208V, 0.44A @277V, 0.40A @277V

Constant Current, Class 1, 480V, 50/60Hz
150W: 0.33A @480V
120W: 0.28A @480V
100W: 0.24A @480V

Dimming Driver:
Driver includes dimming control wiring for 0-10V dimming systems. Requires separate 0-10V DC dimming circuit. Dims down to 10%.
Note: Lightcloud Blue models do not require a 0-10V dimming circuit.

Photocell:
Integrated photocell included with on/off switch
Note: Lightcloud Blue models have adjustable settings via the mobile app.

Surge Protection
6 kV L-N, 6kV L/N-G

ELECTRICAL

Emergency Light Loss Factor:
WL22-S-30:
30W: 18.5%
25W: 23.0%
15W: 38.2%

WL22-M-100:
100W: 8.8%
80W: 12.0%
60W: 15.8%

WL22-M-60:
60W: 14.8%
40W: 22.4%
30W: 29.4%

WL22-L-150:
150W: 6.3%
120W: 7.8%
100W: 9.3%

OTHER

Warranty

The RAB 5-year, limited warranty covers light output, driver performance and paint finish. RAB's warranty is subject to all terms and conditions found at rablighting.com/warranty.

Lifespan
100,000-hour LED lifespan based on IES LM-80 results and TM-21 calculations

WL22 Adjustable Throw Wall Pack

WIRELESS NETWORK LIGHTING CONTROLS

Lightcloud products offer integrated network lighting control for a truly wireless solution that allows you to manage RAB's various compatible devices. With RAB's patented Rapid Provisioning technology, devices can be quickly and easily commissioned for residential and commercial applications. Each device can communicate with other devices in the mesh network. With two Lightcloud systems to choose from, it's easy to implement controls anywhere.

Learn more about Lightcloud wireless networked lighting controls.

Design Lights Consortium Network Lighting Controls:

- Interior Applications: N1XMLOEATB
- Exterior Applications: NHCZ2BIA17L

Lightcloud®

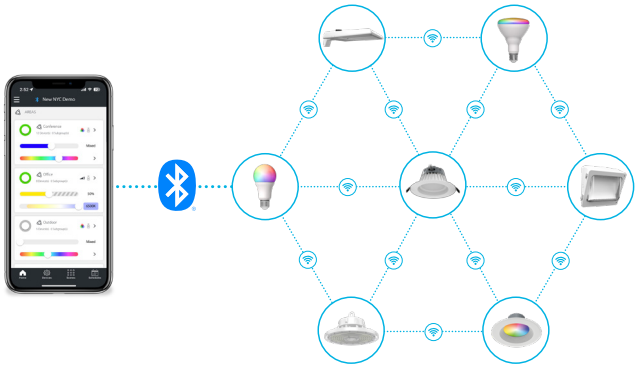

- Utilizes Bluetooth Mesh, eliminating the need for a Gateway or Hub
- Ideal for applications that need basic wireless control such as ON/OFF, dimming, color tuning, Schedules, and SmartShift
- Download the Lightcloud Blue mobile app for iOS or Android devices
- Add the XDIM/BRIDGE/LCB and LCGATEWAY to adopt premium Lightcloud Enterprise features

SIMPLE SETUP

1. Download the app.



2. Connect product to power.



3. Pair product to app.



4. Enjoy!



Learn more about Lightcloud Blue. Visit the Lightcloud Blue Resources page for more information on how to use the system.

WL22 Adjustable Throw Wall Pack

DIMENSIONS :

WL22-S

Weight: 6.34 lbs (120-277V)
Weight: 6.84 lbs (480V)

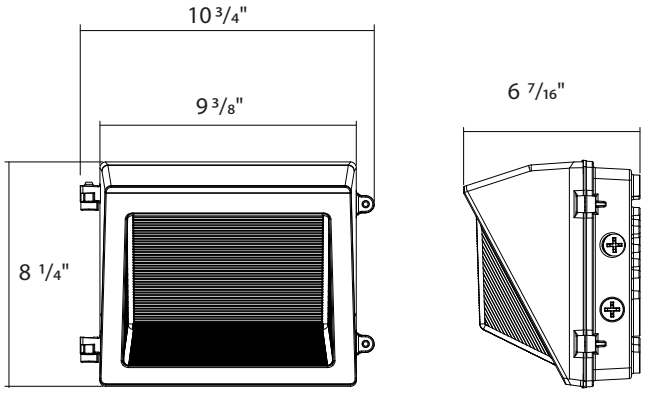

WL22-M

Weight: 7.02 lbs (120-277V)
Weight: 7.52 lbs (480V)

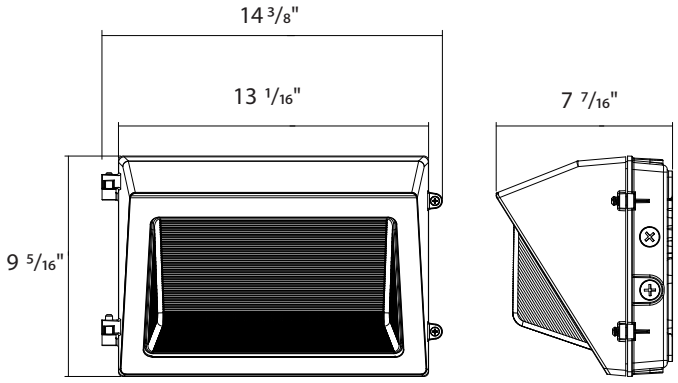

WL22-L

Weight: 11.22 lbs (120-277V)
Weight: 12.03 lbs (480V)

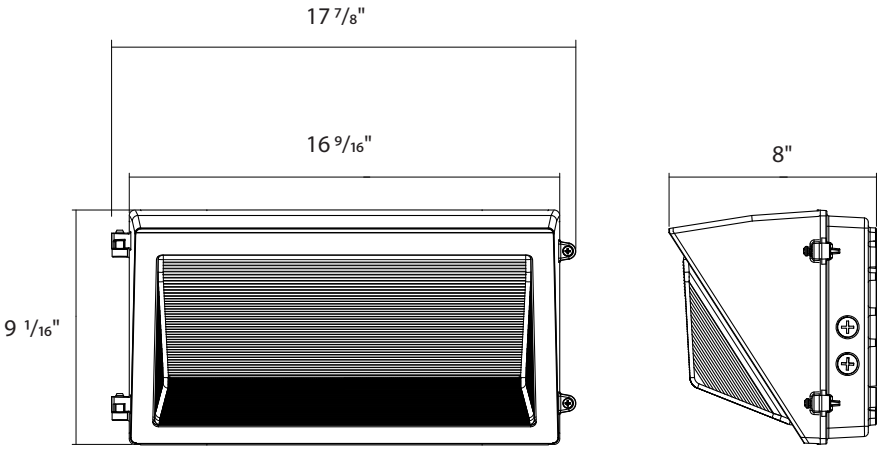

ORDERING MATRIX

WL22 Adjustable Throw Wall Pack

Family	Size	Wattage	Color Temperature	Finish	Beam Angle	Driver	Controls	Battery Backup
WL22 -		-						
	S Small M Medium L Large	30 30/25/15W [1] 60 60/40/30W [2] 100 100/80/60W [2] 150 150/120/100W [3]	BLANK 3000/4000/5000K CCT -Adjustable	BLANK Bronze W White	BLANK Adjustable throw 45°/60°/90°	BLANK 120-277V /480 480V	BLANK /LCBS/MVS Selectable Photocell Lightcloud Blue MVS Sensor [5]	BLANK /E None Battery Backup [4]

[1] S (small) only
[2] M (Medium) only
[3] L (Large) only
[4] Battery backup only on 120-277V.(Only available by special order for the Lightcloud Blue models).
[5] Sensor only available for 120-277V, (w/480V are special order)