INSTRUCTIONS

FIELD-ADJUSTABLE CDX™ INSTALLATION

RAB Lighting is committed to creating high-quality, affordable, well-designed and energy-efficient LED lighting and controls that make it easy for electricians to install and end users to save energy. We'd love to hear your comments. Please call the Marketing Department at 888-RAB-1000 or email: marketing@rablighting.com

** DON'T TOSS IT—RECYCLE IT! MAKE THE SUSTAINABLE CHOICE BY RECYCLING THIS FIXTURE AT END OF LIFE WITH A LICENSED RECYCLING PROVIDER. **



CDX WALL MOUNT S/M/L



CDX PENDANT MOUNT S/M/L



CDX SURFACE MOUNT S/M/L

IMPORTANT

READ CAREFULLY BEFORE INSTALLING FIXTURE. RETAIN THESE INSTRUCTIONS FOR FUTURE REFERENCE. RAB fixtures must be wired in accordance with the National Electrical Code and all applicable local codes. Proper grounding is required for safety. THIS PRODUCT MUST BE INSTALLED IN ACCORDANCE WITH THE APPLICABLE INSTALLATION CODE BY A PERSON FAMILIAR WITH THE CONSTRUCTION AND OPERATION OF THE PRODUCT AND THE HAZARDS INVOLVED.

WARNING:

- Make certain power is OFF before installing or maintaining the fixture. No user serviceable parts inside.
- Fixture supports 120V TRIAC or 0-10V Dimming.

For proper weather-resistant installation, apply weatherproof silicone sealant around edge of the Junction Box where it meets the mounting surface.This is especially important with an uneven surface.

Power, Color Temperature and/or Optical distribution should be selected prior to installation. Do NOT switch settings with power on.

INSTALLATION

WHAT'S IN THE BOX

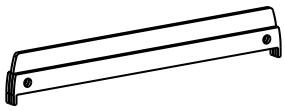

Optical Adjustment Tool
(1 pc)



Phillips Head Machine Screw
#8-32 x 3/8in
(2 pcs)

1. Mount the Fixture using the selection for your mounting type **Surface Mount, Wall Mount, Pendant,** *(Small/Medium/Large).*

2. Connect the supply wires to the fixture as shown in Fig.1. Use UL-certified wire connectors to complete wiring as per code. Avoid pinching wires or routing them against sharp edges.

Fig. 1

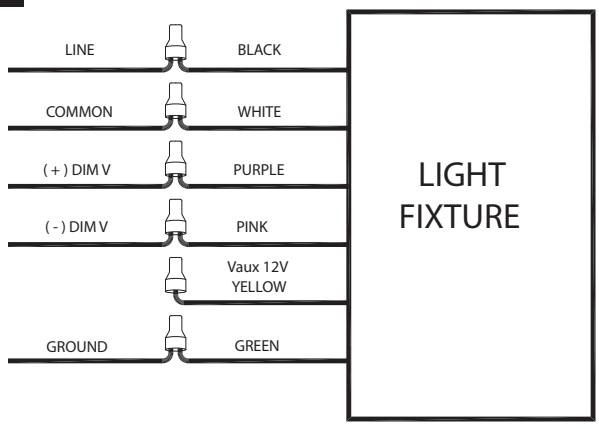

3. **Note**: Universal voltage driver operates at 120V through 277V, 50/60Hz. The Fixture supports 120V TRIAC or 0-10V dimming.
   a. Connect the black fixture lead to the **LINE** supply lead.
   b. Connect the white fixture lead to the **COMMON** supply lead.
   c. Connect the green wire from fixture to supply **GROUND**.
   d. Connect the purple fixture lead to the DIM (+) lead.
   e. Connect the pink fixture lead to the DIM (-) lead.
   f. Cap yellow lead *(Vaux 12)* if present and unused.

INSTRUCTIONS
FIELD-ADJUSTABLE CDX™ INSTALLATION

RAB Lighting is committed to creating high-quality, affordable, well-designed and energy-efficient LED lighting and controls that make it easy for electricians to install and end users to save energy. We'd love to hear your comments. Please call the Marketing Department at 888-RAB-1000 or email: marketing@rablighting.com

** DON'T TOSS IT—RECYCLE IT! MAKE THE SUSTAINABLE CHOICE BY RECYCLING THIS FIXTURE AT END OF LIFE WITH A LICENSED RECYCLING PROVIDER. **

INSTALLATION *(Cont'd)*

3. If desired, change Fixture **Color Temperature** *(CCT)*, **Power** *(W)* and/or **Optics** from factory settings. Locate the **Color Temperature** *(CCT)*, **Power** *(W) and/or* **Optic Field-Adjustable Switches** for your mounting type *(Fig. 2)*.

Fig. 2

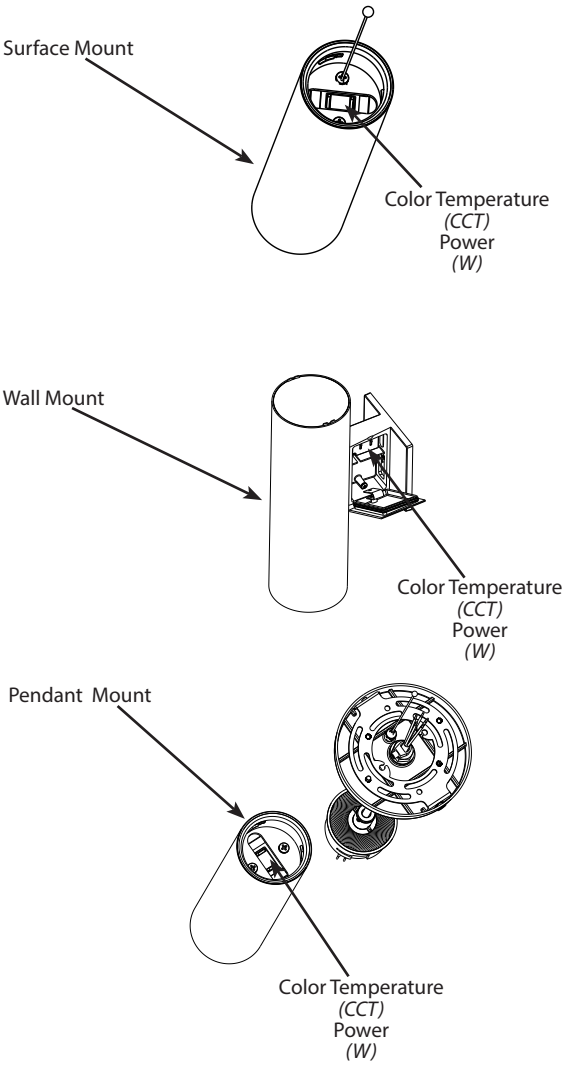

4. **Optical Adjustment Tool** is provided to set optical angle at both top and/or bottom of fixtures as required, see Fig. 3.

Fig. 3

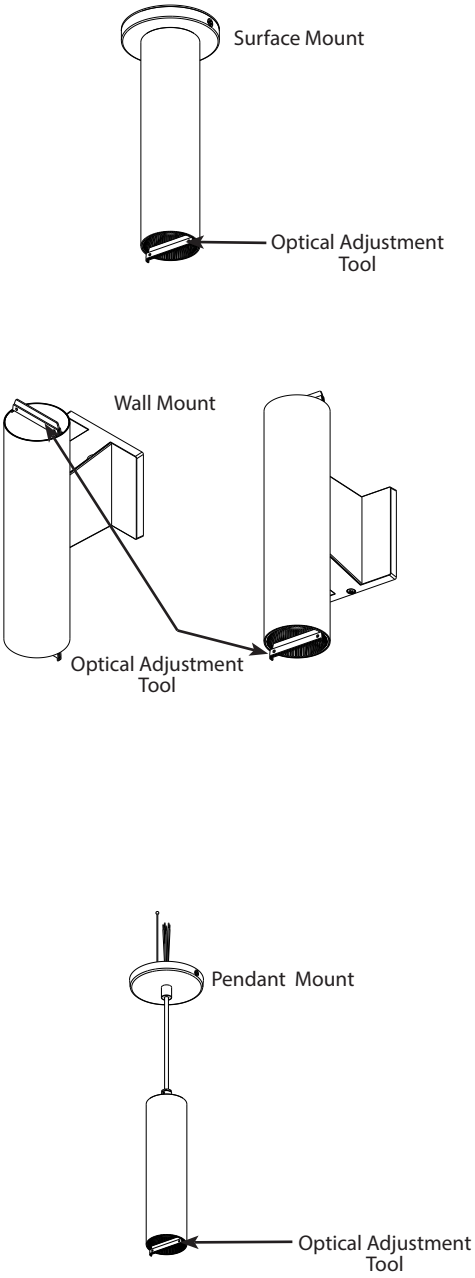

INSTRUCTIONS
FIELD-ADJUSTABLE CDX™ INSTALLATION

RAB Lighting is committed to creating high-quality, affordable, well-designed and energy-efficient LED lighting and controls that make it easy for electricians to install and end users to save energy. We'd love to hear your comments. Please call the Marketing Department at 888-RAB-1000 or email: marketing@rablighting.com

** DON'T TOSS IT—RECYCLE IT! MAKE THE SUSTAINABLE CHOICE BY RECYCLING THIS FIXTURE AT END OF LIFE WITH A LICENSED RECYCLING PROVIDER. **

INSTALLATION *(Cont'd)*

5. Close the fixture for your mounting type.

- **Surface Mount** *(Small)*: Press the **Canopy** onto the J**unction Box Adapter Plate** and reinstall *(2)* **Screws**. Insert the Fixture into the **Canopy** and twist to secure.
- **Surface Mount** *(Medium / Large)*: Insert the Fixture into the **Canopy** and twist to secure.
- **Wall Mount**: Close the Fixture **Arm Door** and secure it with *(1)* **Screw**. Apply silicone sealant around the **Arm Back Plate** where it meets the wall to keep water out.
- **Pendant Cord Mount:** Press the **Canopy Plate** onto the **Junction Box Adapter Plate** and reinstall the *(2)* **Screws**. Twist the Fixture onto the **Canopy** to secure.

Use Beam Adjusting Tool to adjust Beam Angle.

SURFACE MOUNT *(SMALL)*

1. Twist the **Canopy** off the Fixture. Remove *(2)* **Screws** from the side of the **Canopy** to release the **Junction Box Adapter Plate** *(Fig. 4)*.

Fig. 4

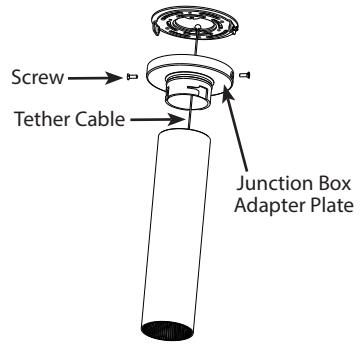

2. Mount the **Junction Box Adapter Plate** to the junction box *(by others)* with **Screws** provided
3. Hang the Fixture from the **Junction Box Adapter Plate** by hooking the pre-installed **Tether Cable** into the Tether Slot.
4. Connect the supply wires to the fixture as shown in Fig.1. Use UL-certified wire connectors to complete wiring as per code. Avoid pinching wire or routing them against sharp edges.

SURFACE MOUNT *(MEDIUM / LARGE)*

1. Twist the Canopy off the Fixture *(Fig. 5)*.

Fig. 5

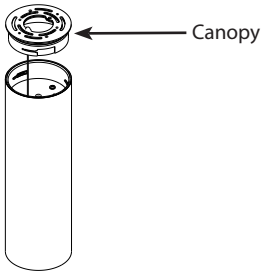

2. Mount the **Canopy** to the junction box *(by others)*.
3. Connect the supply wires to the fixture as shown in Fig.1. Use UL-certified wire connectors to complete wiring as per code. Avoid pinching wire or routing them against sharp edges.

WALL MOUNT *(SMALL /MEDIUM / LARGE)*

1. Remove the *(1)* **Mounting Arm Screw** from the **Arm** and separate the **Junction Box Adapter Plate** *(Fig. 6)*.

Fig. 6

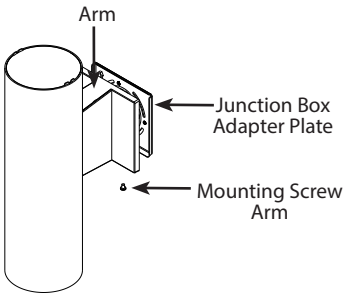

2. Mount the **Junction Box Adapter Plate** to the junction box *(by others)* with *(2)* **Screws** provided. Align the plate's angled sides with the **Mounting Arm Screw** hole.

Fig. 7

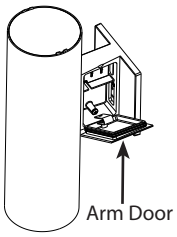

4. Place the **Arm** onto the **Junction Box Adapter Plate** and secure it with *(1)* **Mounting Arm Screw**.
5. Connect the supply wires to the fixture as shown in Fig.1. Use UL-certified wire connectors to complete wiring as per code. Avoid pinching wire or routing them against sharp edges.

INSTRUCTIONS
FIELD-ADJUSTABLE CDX™ INSTALLATION

RAB Lighting is committed to creating high-quality, affordable, well-designed and energy-efficient LED lighting and controls that make it easy for electricians to install and end users to save energy. We'd love to hear your comments. Please call the Marketing Department at 888-RAB-1000 or email: marketing@rablighting.com

** DON'T TOSS IT—RECYCLE IT! MAKE THE SUSTAINABLE CHOICE BY RECYCLING THIS FIXTURE AT END OF LIFE WITH A LICENSED RECYCLING PROVIDER. **

PENDANT CORD MOUNT *(SMALL /MEDIUM / LARGE)*

Note: The Pendant Cord is 48 in long.

1. Remove the *(2)* **Screws** from the side of the **Canopy Plate** to release the **Junction Box Adapter Plate** *(Fig. 8)*.

Fig. 8

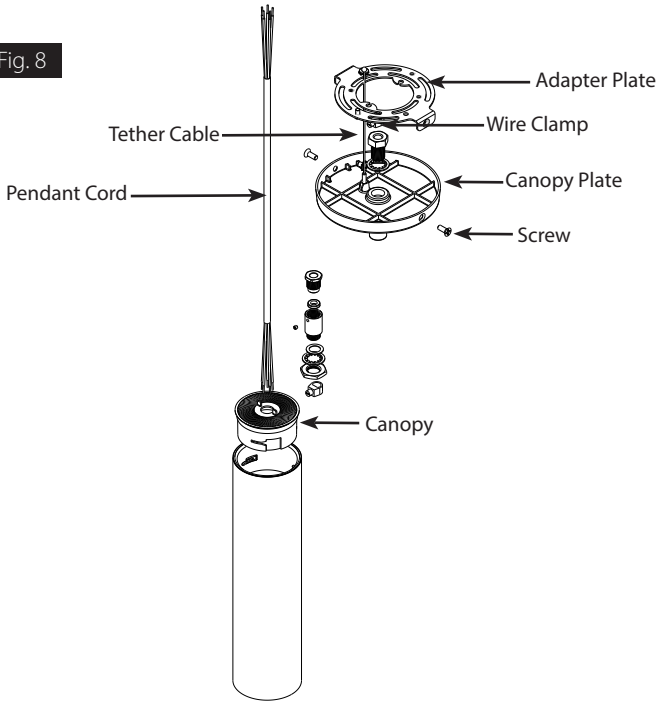

2. Mount the **Junction Box Adapter Plate** to the junction box *(by others)* with the *(2)* **Screws** provided.
3. Hang the **Canopy Plate** from the Junction Box **Adapter Plate** by hooking the pre-installed **Tether Cable** into the Tether Slot.
4. Set the **Pendant Cord** to the desired length by pulling excess cord through the **Canopy Plate**. Tighten the **Wire Clamp** to lock the cord in place.
5. Cut off the excess cord, leaving at least 6 in above the **Canopy Plate** for connection to the supply wires in the junction box.
6. Connect the supply wires to the fixture as shown in Fig.1. Use UL-certified wire connectors to complete wiring as per code. Avoid pinching wire or routing them against sharp edges.
7. Tuck wires into Junction Box and re-install **Canopy** with *(2)* **Screws.**

CLEANING & MAINTENANCE

CAUTION: Be sure fixture temperature is cool enough to touch. Do not clean or maintain while fixture is energized.

1. Clean the fixture lens with a non-abrasive cleaning solution.
2. Do not open the fixture to clean the LEDs. Do not touch the LEDs.

TROUBLESHOOTING

1. Check that the line voltage at the fixture is correct. Refer to wiring directions.
2. Check that the fixture is properly grounded.
3. A blinking light on this thermally protected luminaire may indicate overheating.

Note: *These instructions do not cover all details or variations in equipment nor do they provide for every possible situation during installation, operation or maintenance.*

© 2026 RAB LIGHTING Inc.
CDX-IN-1126
P-103477

Easy Answers

rablighting.com
Visit our website for product info

Tech Help Line
Call our experts: 888 722-1000

e-mail
Answered promptly - tech@rablighting.com

Free Lighting Layouts
Answered online or by request

RAB WARRANTY: *RAB's warranty is subject to all terms and conditions found at rablighting.com/warranty*