INSTRUCTIONS
EM DRIVER INSTALLATION

RAB Lighting is committed to creating high-quality, affordable, well-designed and energy-efficient LED lighting and controls that make it easy for electricians to install and end users to save energy. We'd love to hear your comments. Please call the Marketing Department at 888-RAB-1000 or email: marketing@rablighting.com

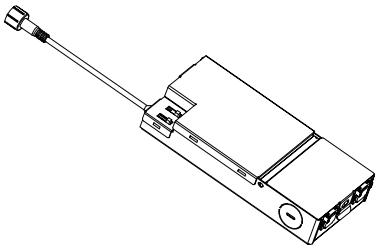

DRI-EMB-15S-LV

IMPORTANT

READ CAREFULLY BEFORE INSTALLING FIXTURE. RETAIN THESE INSTRUCTIONS FOR FUTURE REFERENCE.
RAB fixtures must be wired in accordance with the National Electrical Code and all applicable local codes. Proper grounding is required for safety. THIS PRODUCT MUST BE INSTALLED IN ACCORDANCE WITH THE APPLICABLE INSTALLATION CODE BY A PERSON FAMILIAR WITH THE CONSTRUCTION AND OPERATION OF THE PRODUCT AND THE HAZARDS INVOLVED.
WARNING: Make certain power is OFF before installing or maintaining fixture. No user serviceable parts inside.

PLEASE READ AND FOLLOW ALL SAFETY INSTRUCTIONS

WARNING: AC power must be off before proceeding with assembly or installation of emergency LED driver.

IMPORTANT: An unswitched AC power source of 120VAC is required. This device is designed for use in fixtures listed for dry and damp locations.

IMPORTANT: Customers are advised to charge emergency LED driver 24 hours every 6 months during storage

CAUTION:
- Make sure all electrical connections confirm to the National Electrical Code and all applicable local regulations.
- This emergency LED driver requires an un-switched AC power source of 120Vac,50/60Hz .The AC driver must be on the same branch circuit as the emergency LED driver. Ambient temperature: 5°C to 50°C.
- The use of accessory equipment not recommended by the manufacturer may cause an unsafe condition, void warranty, and result in non-compliance with UL specifications.
- Do not use outdoors. Do not mount near gas or electric heaters.
- Battery is rechargeable Li-ion type and must be recycled or disposed of properly.
- Do not use this equipment for other than its intended use. The emergency LED driver is not for in an air-handling fixture.
- IMPORTANT: Lighting fixture manufacturers, electricians, and end-users need to ensure product system compatibility test before using and final installation.

TESTING SYSTEM: The emergency battery requires a charge minimum of one hour before testing the circuit. A full charge requires twenty-four hours.

OPERATION

Normal Mode: AC power is present. The AC driver operates the LED load as designed. The emergency driver is charging in a standby mode. The charging indicator light is red, showing that the battery is charging.

Emergency Mode: When the AC power goes out, the emergency driver detects the AC power outage and automatically switch to emergency mode. The LED luminaire is illuminated for a minimum of 90 minutes.
When the AC power is restored, the emergency driver switches the system back to the Normal Mode and resumes battery charging.

INSTRUCTIONS
EM DRIVER INSTALLATION

RAB Lighting is committed to creating high-quality, affordable, well-designed and energy-efficient LED lighting and controls that make it easy for electricians to install and end users to save energy. We'd love to hear your comments. Please call the Marketing Department at 888-RAB-1000 or email: marketing@rablighting.com

KEY FEATURES

- 2-in-1, compatible with both conventional power supply function and emergency power supply function.
- Ideal design for LED downlights, built-in junction box.
- 3Power selectable and 5CCT selectable in regular model.
- Emergency power is 4.2W for 90 minutes, lithium battery.
- Meet standard UL8750/UL924/CSA C22.2 NO.141.
- Battery protections: over charge protection, over discharge protection, short circuit protection.
- Indicator shows a variety working modes.
- Self testing.

ELECTRICAL SPECIFICATIONS

- Input Voltage:AC120V,50/60Hz
- Input Current: 200mA max
- Input Power: 21W max
- Output Voltage: DC30-36V
- Output Current: ≤390mA
- Emergency Power: 4.2W
- Power: 9W/12W/15W selectable
- Recharge Time: 24 hours
- Discharge Time: 90 minutes
- Battery: Li-ion battery
- Ambient Temp: 5°C to 50°C *(41°F to 122°F)*
- CCT: 2700K/3000K/3500K/4000K/5000K selectable

Note: These instructions do not cover all details or variations in equipment nor do they provide for every possible situation during installation, operation or maintenance.

DIMENSIONS

Driver-6.69"x3.15"x1.14" *(170mmx80mmx29mm)*

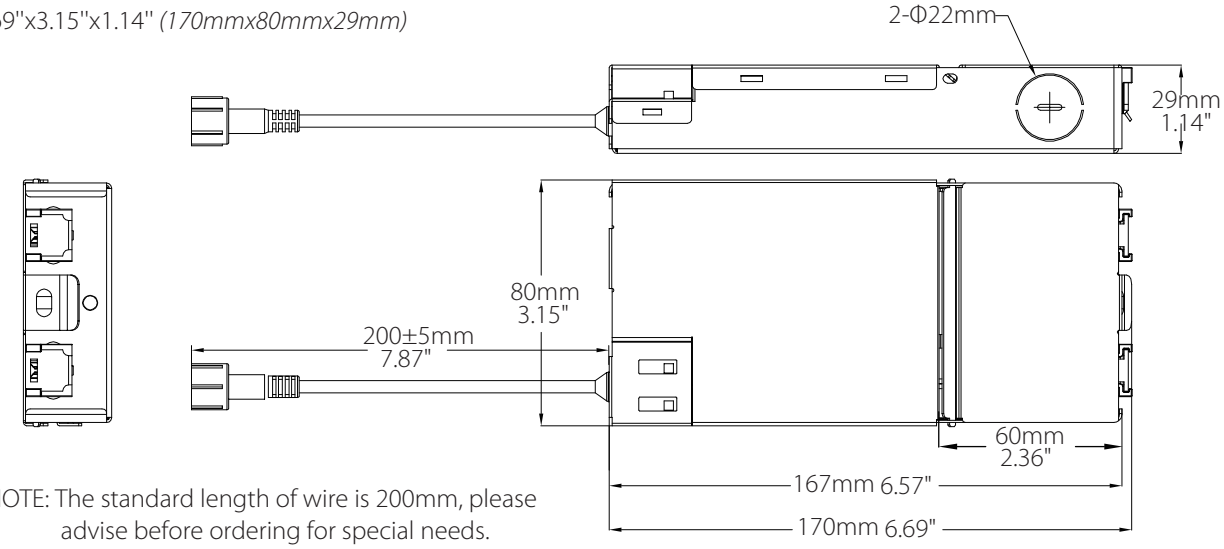

NOTE: The standard length of wire is 200mm, please advise before ordering for special needs.

INSTRUCTIONS
EM DRIVER INSTALLATION

RAB Lighting is committed to creating high-quality, affordable, well-designed and energy-efficient LED lighting and controls that make it easy for electricians to install and end users to save energy. We'd love to hear your comments. Please call the Marketing Department at 888-RAB-1000 or email: marketing@rablighting.com

TEST SWITCH

Skinny Film Test Switch

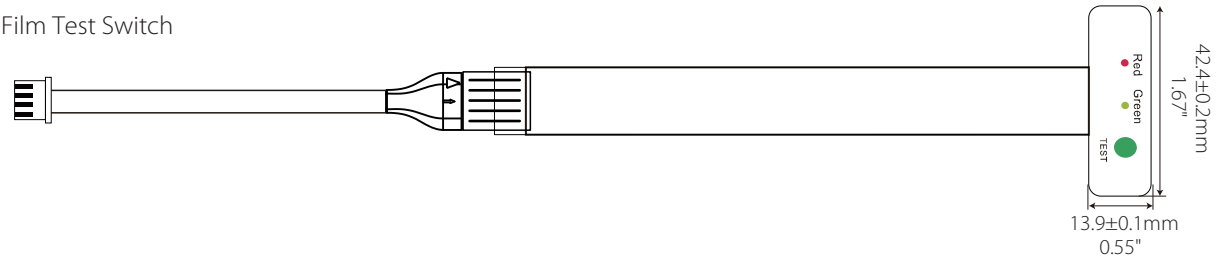

WIRING DIAGRAM

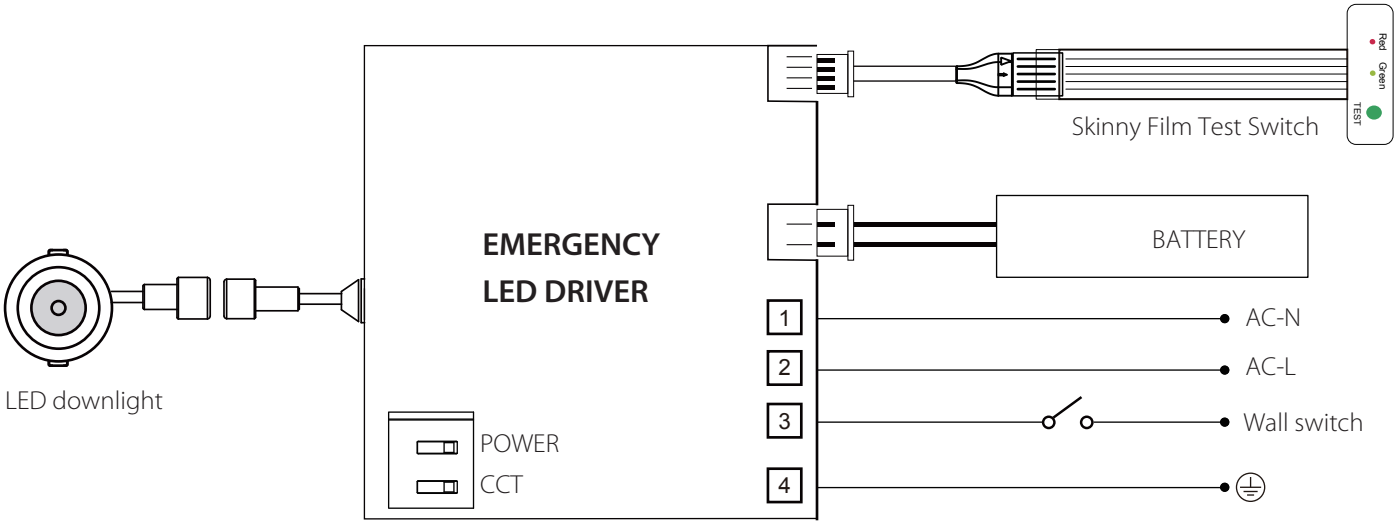

SELF-TEST

This unit contains a control/monitor circuit that if enabled automatically performs a 30-second discharge test once a month and a full 90-minute discharge test once a year. During routine testing, the self-testing emergency driver simulates an AC power failure causing the unit to automatically switch to emergency mode. The unit will monitor the operation of the LED load, battery voltage, and emergency duration. If the emergency system functions properly, then the unit will return to normal mode. Should the unit detect any problems, the indicator light will flash per failure condition (see Troubleshooting Guide) until the condition has been corrected and the unit passes the next test.

Indicator Light Introduction

① Red/ON: Charging
② Green/ON: Full-charged
③ Indicator light OFF: Discharging(emergency mode)
④ Green/Flashing: Self-testing
⑤ Red Flashing:Error

Note: See Trouble Shooting Guide

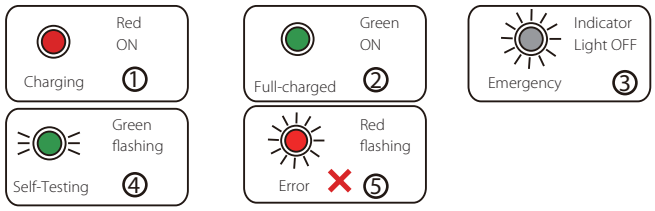

INSTRUCTIONS
EM DRIVER INSTALLATION

RAB Lighting is committed to creating high-quality, affordable, well-designed and energy-efficient LED lighting and controls that make it easy for electricians to install and end users to save energy. We'd love to hear your comments. Please call the Marketing Department at 888-RAB-1000 or email: marketing@rablighting.com

TEST SWITCH INDICATOR STATUS & TROUBLE SHOOTING GUIDE

The charge indicator will be lit Solid Red when charging, and will be lit Solid Green when fully charged and in the standby mode. The indicator will flash Green when self-testing. If a problem is encountered during the test cycle, the indicator will flash Red, according to the diagnostic codes below:

Mode	*LED Indicators Status*	*Error*	*EM Driver Status / Mode*	*Corrective Action*
Normal Mode	Solid Green	None	Battery fully charged/System OK	/
	Solid Red	None	Battery is charging	/
	Both LEDs OFF	None	In EM mode or emergency run-time is ended	/
	Flashing Green	None	Self-Diagnostic test underway	/
Fault Mode	Flashing Red	Battery	Battery not connected	check battery switch or connection.
			Battery failure	Contact after-sales.
		Hardware issue		1. Check input AC mains wiring of Unswitched Hot,Neutral and Ground. 2.Check light connect. 3.Contact after-sales.

MANUAL TEST

Test Mode	*Description*	*Action*	*Status*	*Quit*
Fast Test	Quick discharge test	Press the test button 1 time	LED load will light up for 5s	/
Monthly	30 second test	Press the test button 3s continuously	LED load will light up for 30s	Hold the test button/switch for 1s
Annually	90 minute test	Press the test button 6s continuously	LED load will light up for 90 minutes	Hold the test button/switch for 1s
Suspend Function	Transportation/storage/ disconnecting the battery,etc	During annually test, press the test button 2 times continuously	Shut off the power function	Powered on again

© 2025 RAB LIGHTING Inc.

EMDRIVER-IN-1224
P-101504

RAB WARRANTY: RAB's warranty is subject to all terms and conditions found at rablighting.com/warranty