INSTRUCTIONS

ELX EMERGENCY LIGHTING INSTALLATION

RAB Lighting is committed to creating high-quality, affordable, well-designed and energy-efficient LED lighting and controls that make it easy for electricians to install and end users to save energy. We'd love to hear your comments. Please call the Marketing Department at 888-RAB-1000 or email: marketing@rablighting.com

ELX

ELX-MP

IMPORTANT

READ CAREFULLY BEFORE INSTALLING FIXTURE. RETAIN THESE INSTRUCTIONS FOR FUTURE REFERENCE.
RAB fixtures must be wired in accordance with the National Electrical Code and all applicable local codes. Proper grounding is required for safety. THIS PRODUCT MUST BE INSTALLED IN ACCORDANCE WITH THE APPLICABLE INSTALLATION CODE BY A PERSON FAMILIAR WITH THE CONSTRUCTION AND OPERATION OF THE PRODUCT AND THE HAZARDS INVOLVED.

- When re-lamping, only use lamps specified in the exit sign. Using other lamp types may result in damage to the unit or unsafe conditions.
- Battery in this unit may not be fully charged. After electricity is hooked up to unit, let the battery charge for at least 24 hours. Normal operation of this unit should then take effect.

IMPORTANT SAFEGUARDS:
When using electrical equipment, basic safety precautions should always be followed including the following:
READ AND FOLLOW ALL SAFETY INSTRUCTIONS

- Do not use outdoors.
- Do not mount near gas or electric heaters.
- Equipment should be mounted in locations and at heights where it will not be subjected to tampering by unauthorized personnel.
- The use of accessory equipment not recommended by the manufacturer may cause an unsafe condition.
- Do not use this equipment for other than its intended use.
- Before wiring to power supply, turn off electricity at fuse or circuit breaker.
- Consult local building code for approved wiring and installation.
- Installation and servicing should be performed by qualified personnel.

DETERMINE FACE PLATE

- If single sided is needed, keep silver mylar background panel.
- If double sided is needed, remove silver mylar background panel.
- For clear panel, only single sided is available, no extra action is needed.

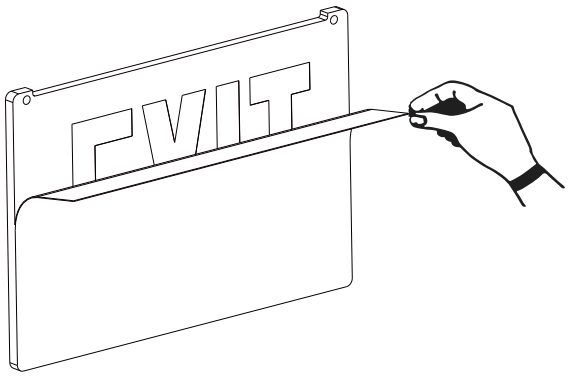

UNIVERSAL LED COLOR

1. The product's default setting is red.
2. Press and hold test switch 2 seconds to change the color to green.
   Notes: Press test switch one time will activate 30 seconds discharging, if you want to change LED color during discharging, press and hold the switch 2 seconds to exit discharge, and then press and hold the switch 2 seconds to change LED color.

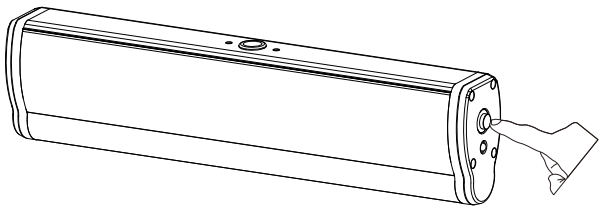

INSTRUCTIONS

ELX EMERGENCY LIGHTING INSTALLATION

RAB Lighting is committed to creating high-quality, affordable, well-designed and energy-efficient LED lighting and controls that make it easy for electricians to install and end users to save energy. We'd love to hear your comments. Please call the Marketing Department at 888-RAB-1000 or email: marketing@rablighting.com

CEILING MOUNT

1. Turn off the power before installing.

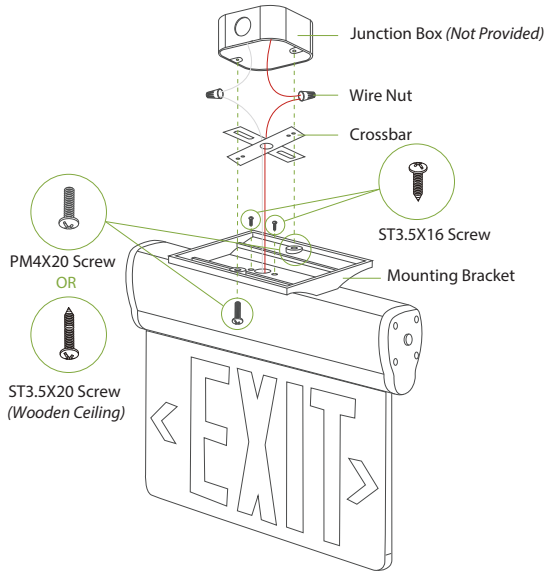

2. Attach the **Crossbar** to the **Junction Box.** *(Not Included)*

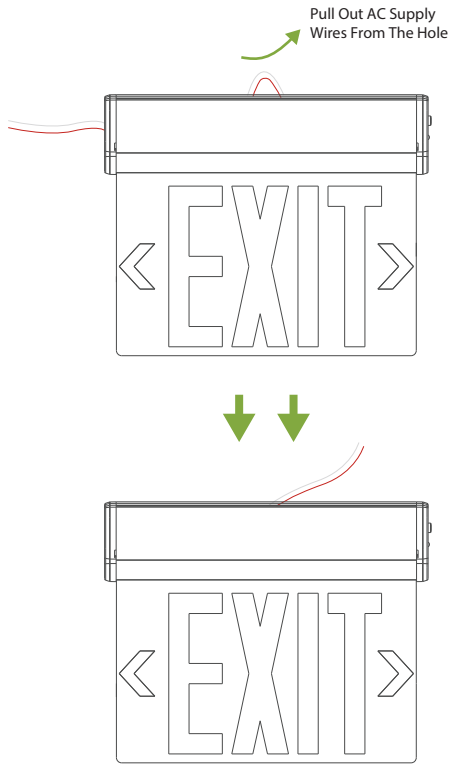

CEILING MOUNT *(cont'd)*

3. Pass the wire through the **Mounting Bracket**'s central hole. Attach the **Mounting Bracket** to the driver box with the **ST3.5X16 Screws**.

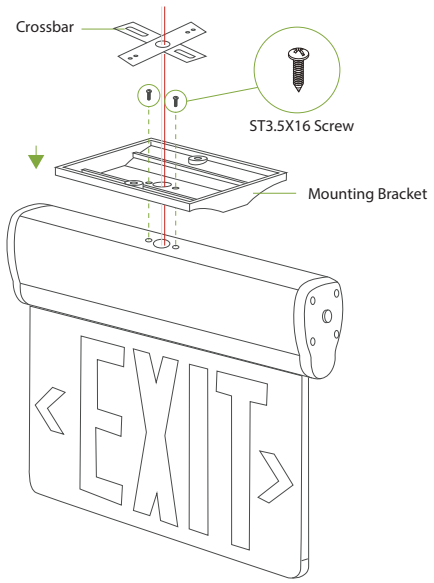

4. Now connect the wires, please connect the red and white wires to the building wire.

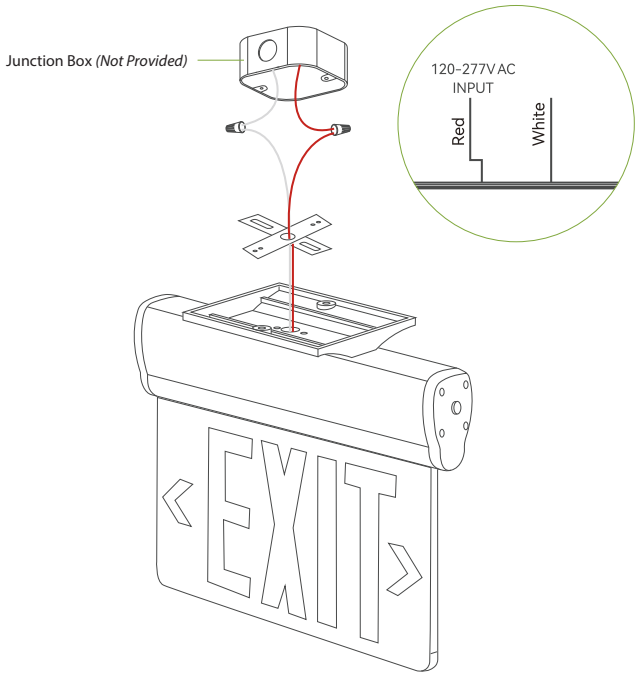

INSTRUCTIONS
ELX EMERGENCY LIGHTING INSTALLATION

RAB Lighting is committed to creating high-quality, affordable, well-designed and energy-efficient LED lighting and controls that make it easy for electricians to install and end users to save energy. We'd love to hear your comments. Please call the Marketing Department at 888-RAB-1000 or email: marketing@rablighting.com

CEILING MOUNT *(cont'd)*

5. Attach the mounting bracket to the **Crossbar** with the **PM4X 20 Screws** orthe **ST3.5X20 screws** ***(Wooden Ceiling)***.

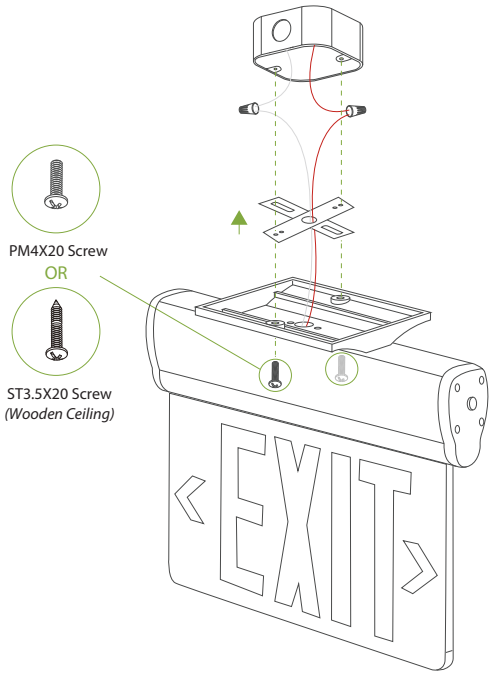

6. If the **Chevrons** are not needed, please tear off from the panel.

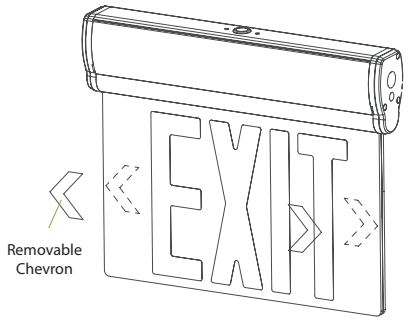

7. The EXIT panel can be **Rotated Up To 180°**. Wall mounting can be completed by rotating the mounting bracket 90°.

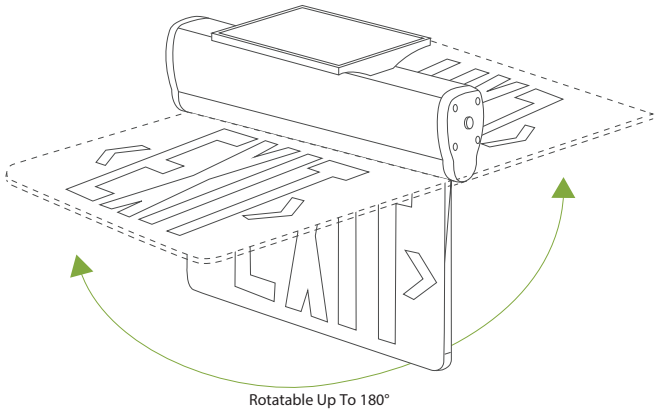

RECESSED MOUNT

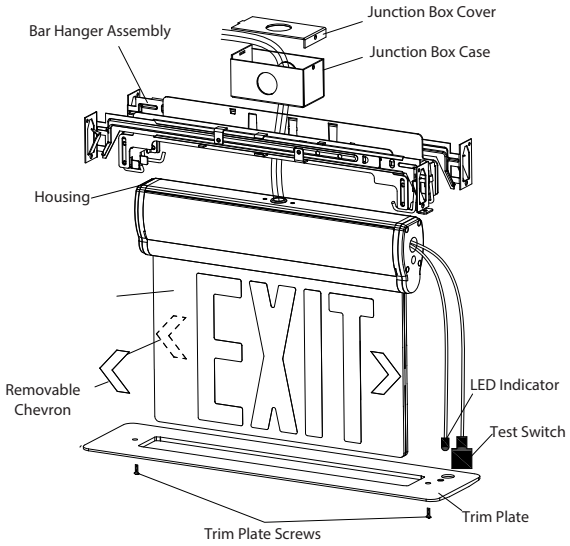

1. Position **Recessed Kits** and bar hangers between **Joists**. Make sure bar hangers are in the correct position and level with the bottom of the **Joists**. Hammer in temporary "nail in" tabs on hanger to hold in place and then secure permanently with the included Recess Bracket Screws for metal **Joists** or wood *(3 x 40 mm)*. Adjust recessed kit vertically to the desired position and then tighten all screws.
   The recommended opening in the surface is 4"x 30" rectangle. Maxdistance between Ceiling Joist is 18.5".

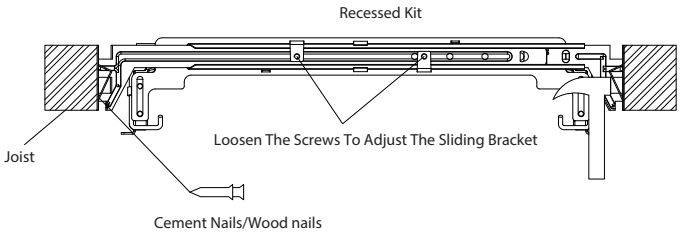

2. Feed **AC Supply Wires** through the center hole.

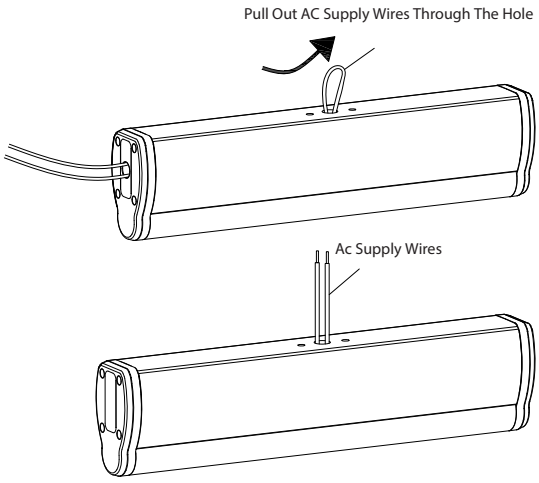

INSTRUCTIONS
ELX EMERGENCY LIGHTING INSTALLATION

RAB Lighting is committed to creating high-quality, affordable, well-designed and energy-efficient LED lighting and controls that make it easy for electricians to install and end users to save energy. We'd love to hear your comments. Please call the Marketing Department at 888-RAB-1000 or email: marketing@rablighting.com

RECESSED MOUNT *(cont'd)*

3. Make the electrical connections to the unit inside the Junction Box. With a strain relief provided by the contractor and secure the lid of the J-Box with the Junction Box to **Junction Box Screw** *(M4X5)*.

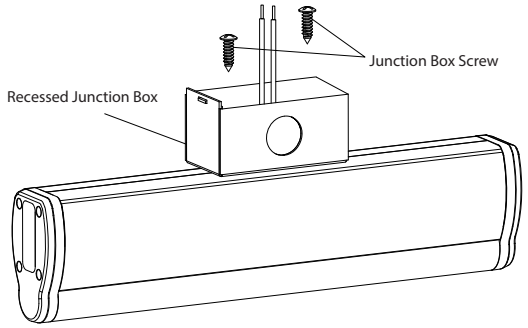

4. Remove the end cap with the Test Switch and Status LED using a **#1 Philips Screwdriver**. Be careful as the end cap also holds the Light Bar and Sign Ratchet. Remove the **Test Button** by unplugging the **Test Button** Connector, pinching the lever locks on the inside of the End Cap, and pushing the **Test Button** through the End Cap Remove the Status LED from the Status LED Mounting Bushing by gently pushing the Status LED back through the End Cap. Route the Status LED through the larger **Test Button** hole. Reinstall the **End Cap** with the same screws *(ST3.0 X10)* making sure the wires from the **Test Button** and Status LED are pulled through the **Test Button** hole.

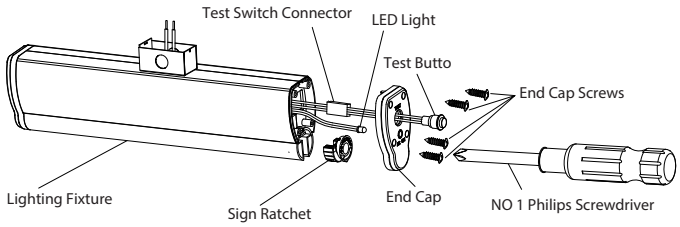

5. Install the light fixture into the Recess Bracket making sure not top inch any wires.
   Tip: Keep the body of the light fixture close to the same plane as the ceiling surface for easier installation.

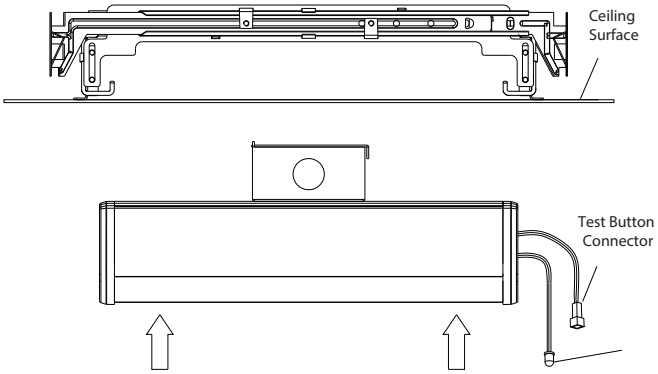

6. In preparation for the next step, route **Status LED** harness and Test Button harness through Recess Bracket between the Trim Plate Mounting Tab and Spring Clip, which is shown in the picture below.

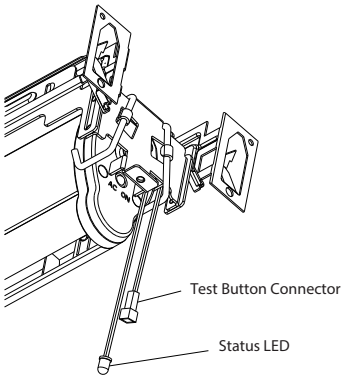

7. Install the **Trim Plate** Insert with **Test Button** and **Status LED** Mounts into the Trim Plate. Insert the Status LED Bushing into the front side of trim plate and push Status LED into bushing from backside of **Trim Plate.**

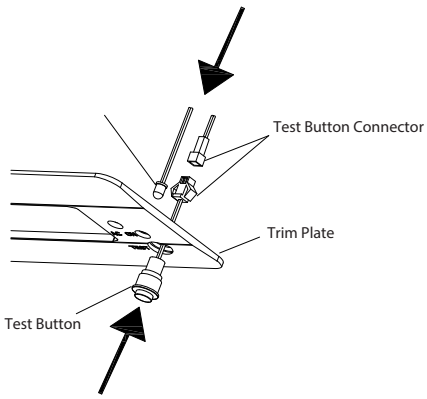

INSTRUCTIONS

ELX EMERGENCY LIGHTING INSTALLATION

RAB Lighting is committed to creating high-quality, affordable, well-designed and energy-efficient LED lighting and controls that make it easy for electricians to install and end users to save energy. We'd love to hear your comments. Please call the Marketing Department at 888-RAB-1000 or email: marketing@rablighting.com

RECESSED MOUNT *(cont'd)*

8. Pass the wires through the center of both the side cover and mounting bracket. Screw the side cover back to the driver box. Attach the mounting bracket to the tightened side cover with the **ST3.5X16 Screws**.
9. Now connect the wires, please connect the red and white wires to the building wire.
10. Attach the mounting bracket to the **Crossbar** with the **PM4X20 Screws** orthe **ST3.5X20 Screws** ***(Wooden Ceiling)*** .
11. If the **Chevrons** are not needed, please tear off from the panel.
12. Install Trim Plate with included **Trim Plate Screws** *(M4X5)* which are shipped in side Universal Mount Accessory Kit located in side the Junction Box.

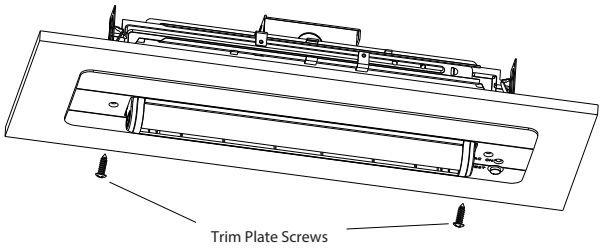

13. Insert panel into main body assembly gently. Make sure the Chevron orientation is correct by peeling unnecessary.

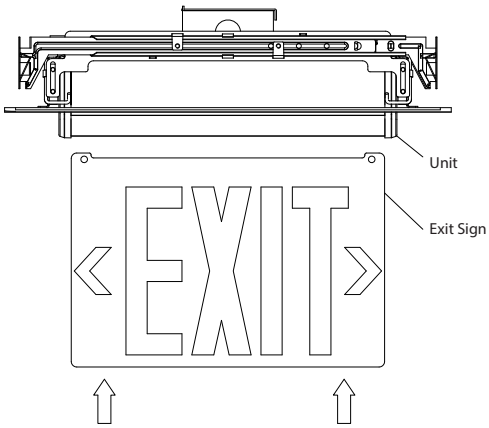

SIDE MOUNT

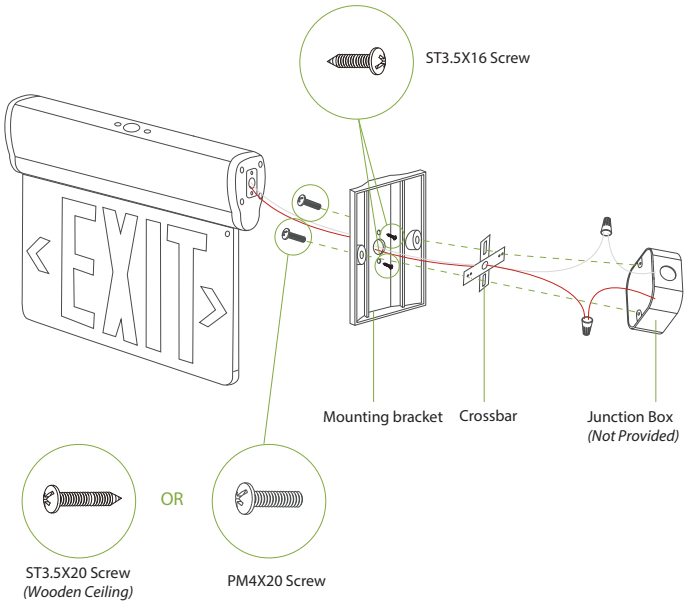
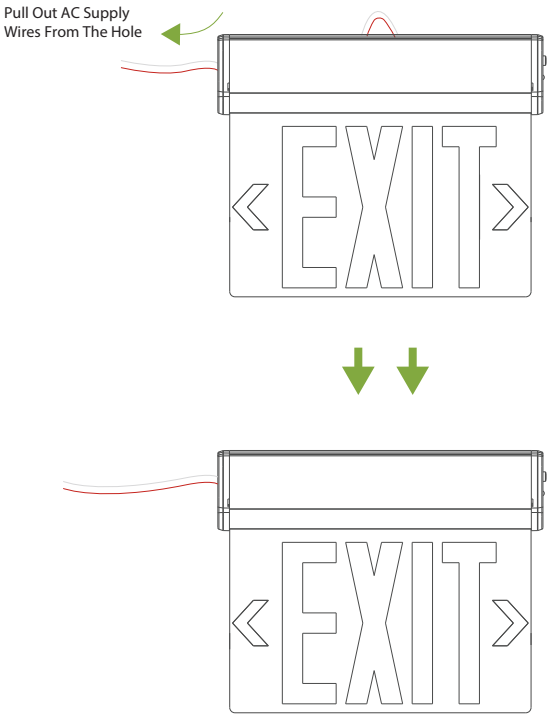
1. Turn off the power before installing.
2. Attach the crossbar to the **Junction Box** ***(Not Included)***