INSTRUCTIONS
FIELD-ADJUSTABLE X34® INSTALLATION

RAB Lighting is committed to creating high-quality, affordable, well-designed and energy-efficient LED lighting and controls that make it easy for electricians to install and end users to save energy. We'd love to hear your comments. Please call the Marketing Department at 888-RAB-1000 or email: marketing@rablighting.com



X34M



X34S



X34XS

IMPORTANT

READ CAREFULLY BEFORE INSTALLING FIXTURE. RETAIN THESE INSTRUCTIONS FOR FUTURE REFERENCE.
Fixtures must be wired in accordance with the National Electrical Code and all applicable local codes. Proper grounding is required for safety. THIS PRODUCT MUST BE INSTALLED IN ACCORDANCE WITH THE APPLICABLE INSTALLATION CODE BY A PERSON FAMILIAR WITH THE CONSTRUCTION AND OPERATION OF THE PRODUCT AND THE HAZARDS INVOLVED.
WARNING: Make certain power is OFF before installing or maintaining fixture. No user-serviceable parts inside.
Suitable for Wet locations. Min 90° supply conductors.
Fixtures operate at 120V only or 277V only.

KNUCKLE MOUNT

To ensure weatherproof seal, apply weather proof silicone sealant around the edge of the junction box *(by others)*. This is especially important with an uneven surface.

1. Secure the fixture to a 1/2" NPS hole in the junction box or landscape post as shown in Fig. 1. Seal arm thread using Teflon® tape or silicone sealant.
2. The X34 swivel arm allows 180° of vertical aiming adjustment depending on the mounting position as shown in Fig. 2.

Fig: 1

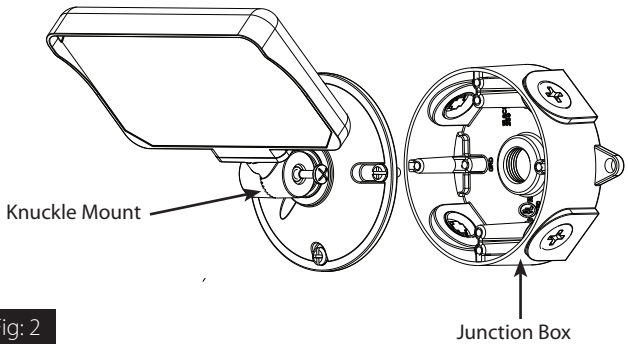

Fig: 2

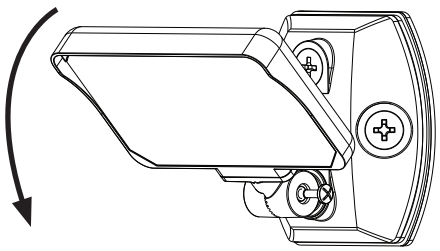

FIELD ADJUSTMENT

Follow instructions below to change the fixture **Color Temperature** *(CCT)* and/or **Power** *(W)* from the factory settings.

Factory Settings: X34XS 16W / 4000K
X34S 35W / 4000K
X34M 65W / 4000K

1. Locate the selector switches on bottom of fixture housing as shown in Fig. 3 and 4, remove plug.
2. Select **Color Temperature** *(CCT)* and/or **Power** *(W)* by sliding the respective switch to the desired value.
3. After the switch is positioned to the desired setting replace plug.

Fig: 3

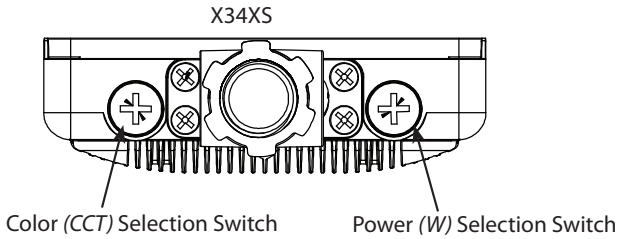

Fig: 4

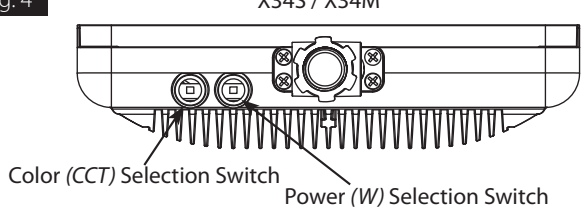

INSTRUCTIONS
FIELD-ADJUSTABLE X34® INSTALLATION

RAB Lighting is committed to creating high-quality, affordable, well-designed and energy-efficient LED lighting and controls that make it easy for electricians to install and end users to save energy. We'd love to hear your comments. Please call the Marketing Department at 888-RAB-1000 or email: marketing@rablighting.com

WIRING

Driver permits operation at 120V ***(only)*** or 277V ***(only)***, 50 or 60 Hz as shown in Fig. 5.

Connect the black fixture lead to the LINE supply lead.

1. Connect the white fixture lead to the COMMON supply lead.
2. Connect the GROUND wire from fixture to supply ground.

Fig: 5

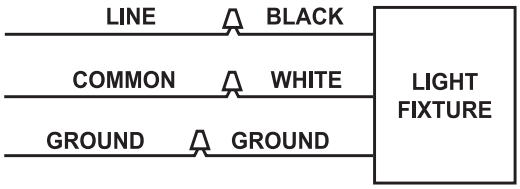

CLEANING & MAINTENANCE

CAUTION: Be sure fixture temperature is cool enough to touch. Do not clean or maintain while fixture is energized.

1. Clean lens with non-abrasive glass cleaning solution.
2. Do not open the fixture to clean the LEDs. Do not touch the LEDs.

TROUBLESHOOTING

1. Check that the line voltage at the fixture is correct.
2. Be sure the fixture is grounded properly.

Note: *These instructions do not cover all details or variations in equipment nor do they provide for every possible situation during installation, operation or maintenance.*

© 2023 RAB LIGHTING Inc.

Easy Answers

rablighting.com
Visit our website for product info

Tech Help Line
Call our experts: 888 722-1000

e-mail
Answered promptly - sales@rablighting.com

Free Lighting Layouts
Answered online or by request

INSTRUCTIONS
FIELD-ADJUSTABLE X34® FLOODLIGHT INSTALLATION

RAB Lighting is committed to creating high-quality, affordable, well-designed and energy-efficient LED lighting and controls that make it easy for electricians to install and end users to save energy. We'd love to hear your comments. Please call the Marketing Department at 888-RAB-1000 or email: marketing@rablighting.com



X34L



X34XL



X34XXL

IMPORTANT

READ CAREFULLY BEFORE INSTALLING FIXTURE. RETAIN THESE INSTRUCTIONS FOR FUTURE REFERENCE.
Fixtures must be wired in accordance with the National Electrical Code and all applicable local codes. Proper grounding is required for safety. THIS PRODUCT MUST BE INSTALLED IN ACCORDANCE WITH THE APPLICABLE INSTALLATION CODE BY A PERSON FAMILIAR WITH THE CONSTRUCTION AND OPERATION OF THE PRODUCT AND THE HAZARDS INVOLVED.
WARNING: Make certain power is OFF before installing or maintaining fixture. No user-serviceable parts inside.
CAUTION: Risk of Fire.
Suitable for wet locations. Min 90° supply conductors.

SLIPFITTER MOUNTING

1. The slipfitter mounting fits a 2 3/8" O.D. **Tenon.** Place the slipfitter over the **Tenon** and secure the fixture with *(2)* **Set Screws** on the side of the **Slipfitter** as shown in Fig. 1.
2. Loosen the **Locking Bolt** and swivel fixture to desired angle *(Fig. 2)*.
3. Tighten the **Locking Bolt**.

TRUNNION MOUNTING

CAUTION: UL certified liquid-tight cord grip suitable for use with three-conductor-type STW flexible cord shall be used for connection to a wet location outlet box provided by others.

To adjust the angle of the fixture using the **Trunnion**:

1. Loosen the **Pivot Bolts** & **Angle Locking Screw** *(Fig. 3)*.
2. Adjust fixture to desired angle.
3. Tighten **Pivot Bolts** & **Angle Locking Screw**.

Fig: 1

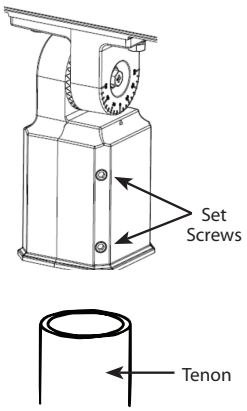

Fig: 2

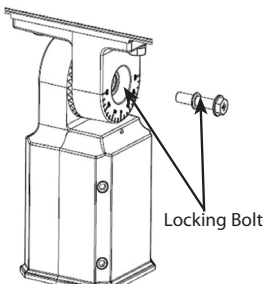

Fig: 3

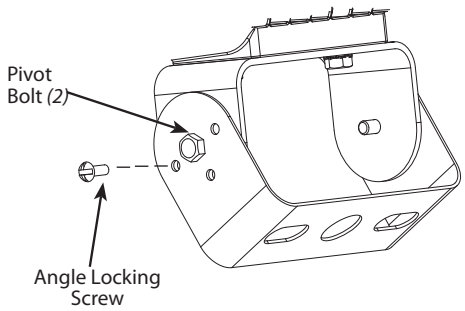

INSTRUCTIONS
FIELD-ADJUSTABLE X34® FLOODLIGHT INSTALLATION

RAB Lighting is committed to creating high-quality, affordable, well-designed and energy-efficient LED lighting and controls that make it easy for electricians to install and end users to save energy. We'd love to hear your comments. Please call the Marketing Department at 888-RAB-1000 or email: marketing@rablighting.com

FIELD ADJUSTMENT

Photocell Operation:
This product is equipped with a photocell. **Photocell factory setting is set to the "OFF" position**. Should you wish to enable the Photocell "ON" feature, slide the center switch to the "ON" position as shown in Fig. 5.
If the Photocell is set to the "ON" position and it is daylight, it may take up to 60-seconds for the light to turn off.

Color Temperature *(CCT)* Selection:
This product is equipped with 5000K, 4000K or 3000K **Color Temperature** *(CCT)* selection. For maximum light output use the 4000K **Color Temperature** *(CCT)*.

Power Selection:
X34L is equipped with 90W/80W/70W **Power** output selection
X34XL is equipped with 130W/110W/95W **Power** output selection.
X34XXL is equipped with 160W/140W/120W **Power** output selection.

Follow instructions below to change **Photocell** operation, **Color Temperature** *(CCT)* and/or **Power** from factory settings.

Factory Settings: Maximum Power, 4000K CCT, Photocell/OFF.

1. Locate the selector switches on side of housing as shown in Fig. 4.
2. Select **Color Temperature** *(CCT)*, **Power** and/or **Photocell** ON/OFF function by sliding the respective switch to the desired value *(Fig. 5)*.

Fig: 4

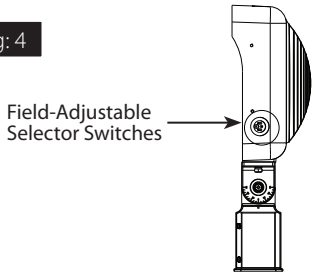

Fig: 5

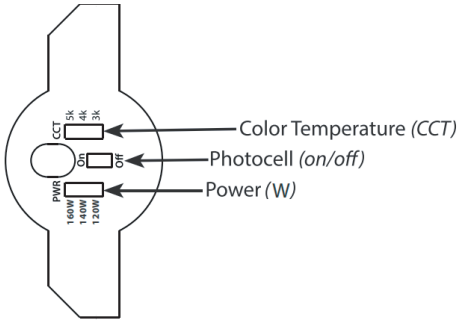

0-10V DIMMABLE WIRING

Universal voltage driver permits operation at 120V through 277V, 50 or 60 Hz. For 0-10 dimming follow the wiring directions as shown in Fig. 6.

1. Connect the black fixture lead to the **LINE** supply lead.
2. Connect the white fixture lead to the **COMMON** supply lead.
3. Connect the **GROUND** wire from fixture to supply ground. Do NOT connect the **GROUND** of the dimming fixture to the output.
4. Connect the purple fixture lead to the DIM V+ lead.
5. Connect the pink fixture lead to the DIM V- lead.
6. Internal 12V (aux) wire is capped, DO NOT CONNECT.

Fig: 6

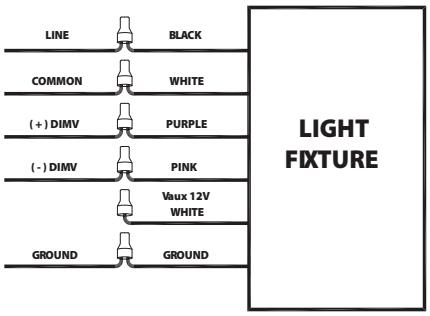

CLEANING & MAINTENANCE

CAUTION: Be sure fixture temperature is cool enough to touch. Do not clean or maintain while fixture is energized.

1. Clean lens with non-abrasive cleaning solution.
2. Do not open the fixture to clean the LEDs. Do not touch the LEDs.

TROUBLESHOOTING

1. Check that the line voltage at the fixture is correct. Refer to wiring directions.
2. Is the fixture grounded properly?
3. Is the photocell, if used, functioning properly?

Note: *These instructions do not cover all details or variations in equipment nor do they provide for every possible situation during installation, operation or maintenance.*

© 2023 RAB LIGHTING Inc.

Easy Answers

rablighting.com
Visit our website for product info

Tech Help Line
Call our experts: 888 722-1000

e-mail
Answered promptly - sales@rablighting.com

Free Lighting Layouts
Answered online or by request

X34 L-XL-XXL 1223
P-100732

INSTRUCTIONS
FIELD-ADJUSTABLE X34® INSTALLATION

RAB Lighting is committed to creating high-quality, affordable, well-designed and energy-efficient LED lighting and controls that make it easy for electricians to install and end users to save energy. We'd love to hear your comments. Please call the Marketing Department at 888-RAB-1000 or email: marketing@rablighting.com

LIGHTCLOUD® BLUE RGB MODELS

Lightcloud Blue is a Bluetooth mesh wireless lighting control system that allows you to control various compatible devices. With RAB's patented Rapid Provisioning technology, devices can be quickly and easily commissioned for residential and large commercial applications using the Lightcloud Blue mobile app.

Each device in a system can communicate with any other device, eliminating the need for a Gateway or Hub and maximizing the control system's reach.

Lightcloud Blue devices should be placed within the specified range to communicate within the Bluetooh Mesh network. Up to 60 feet between standard building materials.

FIXTURE LOCATION

Lightcloud Blue devices should be positioned within 60 ft. of each other.

Building materials such as brick, concrete and steel construction may require additional Lightcloud Blue devices to extend around an obstruction.

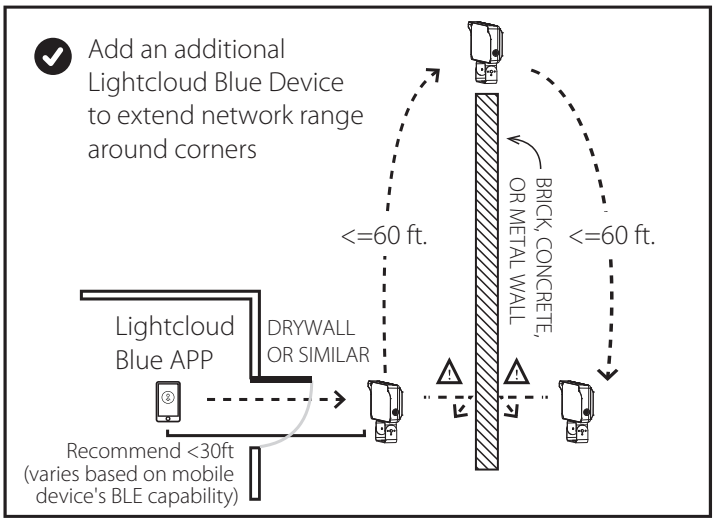

ADJUSTING RGB COLORS

To access the RGB color wheel, select the chevron (>) to the right of the CCT slider bar and select RGB. Add up to 10 favorite colors per device or Area. Once a color has been defined, press the back button (<) in the top left.

CONTROLLING LIGHTCLOUD® BLUE DEVICE

1. Confirm your device is powered on.
2. Download the Lightcloud Blue app from the Apple® App store or Google Play™ store.
3. Launch the App and create an account or login.
4. Tap the "add device" icon in the app to start connecting devices.
5. Create Areas, Scenes and Schedules to organize and control your devices.
6. You're all set!

For additional information about the Lightcloud Blue mobile app visit www.lightcloud.com/item/lcb-getting-started/

RESET TO FACTORY SETTINGS

If your Lightcloud Blue fixture is already paired, you can reset it to factory settings by using the below methods.

Method 1: Delete from App

Open the app and access the device settings for the paired device. Be sure that the downlight is online (green status bars are visible) and select "Delete".

Method 2: Reset Button

Press and release the Reset Button.

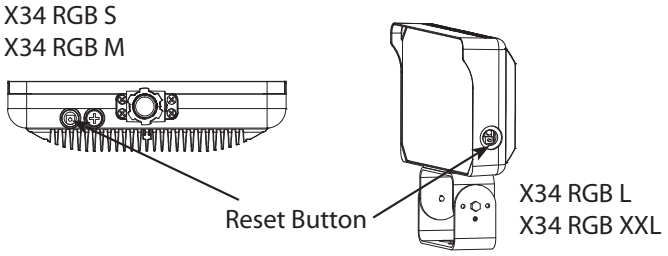

CONFIGURATION

To configure the Lightcloud Blue please login to the Lightcloud Blue app for details. For additional startup information, visit www.lightcloud.com/item/lcb-getting-started/

© 2024 RAB LIGHTING Inc.