HAZPAN Hazardous Location Lighting

HAZPAN2X2

HAZPAN1X4

HAZPAN2X4

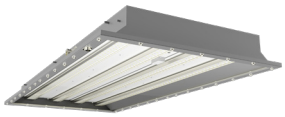

HAZPAN Hazardous Location Lighting

0-10V | 100,000 HOURS | IP RATING | WET RATED

PROJECT:

DATE:

TYPE:

PREPARED BY:

5 YEAR NO-COMPROMISE WARRANTY | DLC LISTED | UL CERTIFIED

KEY FEATURES

- Available in following sizes and selectable wattages:
  2'X2': 40/60W
  1'X4': 40/60W
  2'X4': 60/80W
- Available CCT: **5000K**
- Voltage rating **120-277V**
- **Pendant mount** kit and **ceiling mount** kits included. **Recessed mounting** kit sold separately
- Designed to perform in the areas with **hazardous vapor** and gases
- **Battery backup** and **microwave occupancy sensor** options available. Hazardous location microwave sensor & sensor kit accessories availble.
- **IP66** rated
- Certified for **Class 1**, **Division 2** (**GroupA, B, C, D**)
- Temperature rating of **T5** or **T6** (chain and ceiling mount)
- UL Listed for **wet** location
- 5-Year, no-compromise warranty

PERFORMANCE

MODEL#	HAZPAN2X2-40	HAZPAN2X2-60	HAZPAN1X4-40	HAZPAN1X4-60	HAZPAN2X4-60	HAZPAN2X4-80
CCT	5000K	5000K	5000K	5000K	5000K	5000K
WATTAGE	40W	60W	40W	60W	60W	80W
INPUT WATTS	40.2W	60.2W	40.1W	60.0W	60.2W	80.2W
LUMENS	5,985	8,834	5,885	8,701	9,247	12,479
EFFICACY (LM/W)	148.9	146.7	146.8	145.0	153.6	155.6
CRI	85	84	84	84	85	85
VOLTAGE RATINGS	120-277V					

TECHNICAL SPECIFICATIONS

COMPLIANCE

UL Listed
Suitable for wet locations. Certified to UL standard 1598 and 844

DLC Listed
This product family is listed with the DesignLights Consortium (DLC). Individual SKUs within this family may carry either a DLC Standard or DLC Premium qualification. Please refer to the individual product specification sheet or the DLC Qualified Products List (QPL) at designlights.org to confirm the qualification status of a specific SKU prior to specification or purchase.

COMPLIANCE

Hazardous Location Classifications:

Class 1, Division 2(Group A,B,C,D)
Class 1 (Hazardous Material in Surrounding Atmosphere):Flammable vapors or gases may be present
Division 2 (Presence of Hazardous Materials):
Ignitable concentrations of hazards exist only under accidental system breakdowns or abnormal operating conditions
Groups A, B, C, D (Hazardous Material in Surrounding Atmosphere):
A = Acetylene
B = Hydrogen, butadiene, ethylene oxide, propylene oxide and acrolein
C = Ethylene, cyclopropane and ethyl ether
D = Acetone, ammonia, benzene, butane, ethanol, gasoline, hexane, methane, methanol, naphta, natural gas, propane & toluene

HAZPAN Hazardous Location Lighting

TECHNICAL SPECIFICATIONS (CONTINUED)

CONSTRUCTION

Cold Weather Starting
The minimum starting temperature is -40°C (-40°F)

Maximum Ambient Temperature
Suitable for use in up to 50°C (122°F)

Cold Weather Starting for Battery Backup
The minimum starting temperature is 0°C (32°F)

Maximum Ambient Temperature for Battery Backup
Suitable for use in up to 70°C (158°F)

Mounting
All models come standard with ceiling mount and pendant mount kits. Recessed mount kit will be sold as an accessory.

Housing
Sheet metal

Lens
Polycarbonate

Gasket
Silicone

IP Rating
Ingress protection rating of IP66 for dust and water

Green Technology
Mercury and UV free. RoHs-compliant components.

Finish
Formulated for high durability and long lasting color

LED CHARACTERISTICS

LEDs
Long-life, high-efficacy, discrete, surface-mount LEDs

Color Consistency
7-step MacAdam Ellipse binning to achieve consistent fixture-to-fixture color

Color Uniformity
RAB's range of Correlated Color Temperature follows the guidelines of the American National Standard for Specifications for the Chromaticity of Solid State Lighting (SSL) Products, ANSI C78.377-2017.

ELECTRICAL

Drivers:
Constant Current, Class 2,120-277V, 50/60 Hz
HAZPAN2X2
40W: 120V: 0.34A, 208V: 0.19A, 240V: 0.17A, 277V: 0.16A
60W: 120V: 0.50A, 208V: 0.29A, 240V: 0.25A, 277V: 0.24A

HAZPAN1X4
40W: 120V: 0.33A, 208V: 0.19A, 240V: 0.17A, 277V: 0.16A
60W: 120V: 0.50A, 208V: 0.29A, 240V: 0.25A, 277V: 0.24A

HAZPAN2X4
60W: 120V: 0.50A, 208V: 0.29A, 240V: 0.25A, 277V: 0.24A
80W: 120V: 0.67A, 208V: 0.39A, 240V: 0.33A, 277V: 0.30A

Dimming Driver:
Driver includes dimming control wiring for 0-10V dimming systems. Requires separate 0-10V DC dimming circuit. Dims down to 10%.

ELECTRICAL

THD / Power Factor:

MODEL#	THD	POWER FACTOR	THD	POWER FACTOR
HAZPAN2X2-40	4.2%	99.5%	14.4%	90.3%
HAZPAN2X2-60	2.3%	99.7%	8.2%	90.8%
HAZPAN1X4-40	5.6%	99.5%	16.8%	90.4%
HAZPAN1X4-60	2.7%	99.6%	8.9%	90.4%
HAZPAN2X4-60	2.9%	99.7%	8.4%	90.7%
HAZPAN2X4-80	2.6%	99.9%	12.0%	94.4%
INPUT VOLTAGE	120V		277V	

Battery Backup:
Battery backup will operate the LED Lamp for 90 minutes if power falls. Wired for 120-277V.

Surge Protection
L/N-PE: 10kV, L-N: 6kV

Temperature Ratings:

MODEL#	AMBIENT TEMPERATURE	T-CODE	MOUNTING
HAZPAN2X2-40	-40°C to 40°C	T6	
	-40°C to 56°C	T6	
	-40°C to 66°C	T5	
HAZPAN2X2-60	-40°C to 40°C	T6	
	-40°C to 56°C	T5	
	-40°C to 66°C	T5	
HAZPAN1X4-40	-40°C to 40°C	T6	Recessed
	-40°C to 56°C	T6	Ceiling
	-40°C to 66°C	T6	Pendant
HAZPAN1X4-60	-40°C to 40°C	T6	
	-40°C to 56°C	T5	
HAZPAN2X4-60	-40°C to 40°C	T6	
	-40°C to 56°C	T6	
HAZPAN2X4-80	-40°C to 40°C	T6	

HAZPAN Hazardous Location Lighting

TECHNICAL SPECIFICATIONS

MICROWAVE OCCUPANCY SENSOR (OPTIONAL) WITH THE MSR2 REMOTE

- 12VDC Input, IC Solution
- On/off control
- Operating Voltage: 10-15V
- Detection Sensitivity: 25%/50%/75%/100%
- Microwave Frequency: 5.8GHz ± 75MHz
- Hold Time: 5 sec/30 sec/1 min/10 min/20 min/30 min
- Microwave Power: <0.3mW
- Switching Capacity: <40mA
- Daylight Threshold: 2Lux/10Lux/30Lux/50Lux/80Lux/120Lux/Disable
- Mounting Height: 2.5 - 4.5 m/8.2 - 14.76 ft
- Operating Current: < 30mA
- Stand-by Period: 0 sec/10 sec/30 sec/1 min/5 min/10 min/+∞
- Detection Range: 3 - 7 m/ 9.84 - 22.96 Ft
- Control Method: 0-10V
- Stand-by Dimming Level: 10%/20%/30%/50%
- Detection Angle: 360° (Ceiling Mounted)
- Operating Temperature: -35°C to 70°C
- Factory Default Setting:
- Detection area 100%
- Hold time 5sec
- Daylight threshold Disable
- Stand-by period 0 sec
- Stand-by dimming level 10%.

OTHER

Warranty

The RAB 5-year, no-compromise warranty covers light output, color stability, driver performance, paint finish and labor. RAB's warranty is subject to all terms and conditions found at rablighting.com/warranty.

Lifespan:

100,000-Hour LED lifespan based on IES LM-80 results and TM-21 calculations

ACCESSORIES

IMAGE	SKU#	UPC	DESCRIPTION	WEIGHT
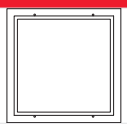	HAZPANRM2X2	192552038171	RECESSED MOUNT KIT FOR HAZPAN2X2 MODELS	11.9 lbs
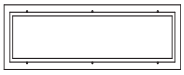	HAZPANRM1X4	192552038164	RECESSED MOUNT KIT FOR HAZPAN1X4 MODELS	14.6 lbs
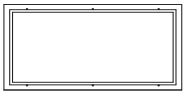	HAZPANRM2X4	192552038188	RECESSED MOUNT KIT FOR HAZPAN2X4 MODELS	19.0 lbs
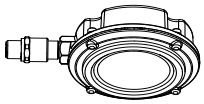	HAZMVS	192552038027	MVS SENSOR MAX 32FT HEIGHT IP66 HAZ LOCATION W/REMOTE CONTROL	1.76 lbs
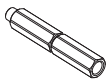	HAZMVS-KIT	192552038034	EXTENSION KIT FOR HAZMVS HAZARDOUS LOCATION	1.76 lbs

HAZPAN Hazardous Location Lighting

DIMENSIONS

HAZPAN2X2

Weight: 35.93 lbs

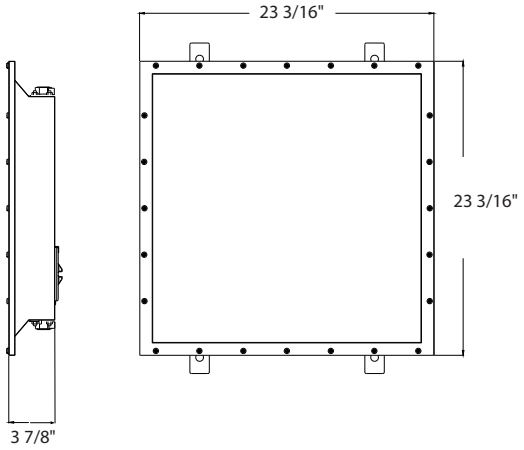

HAZPAN1X4

Weight: 29.98 lbs

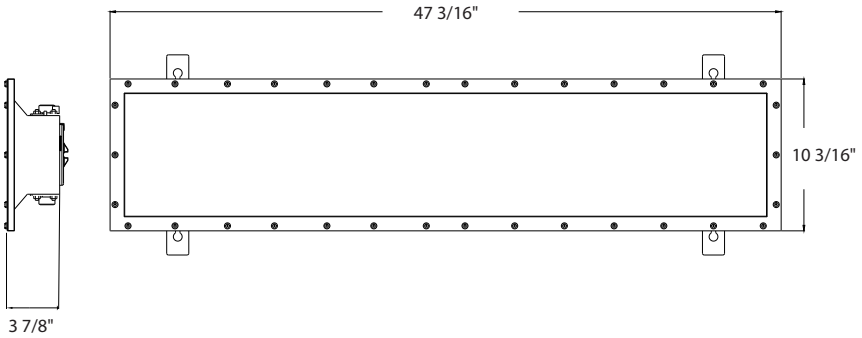

HAZPAN2X4

Weight: 53.35 lbs

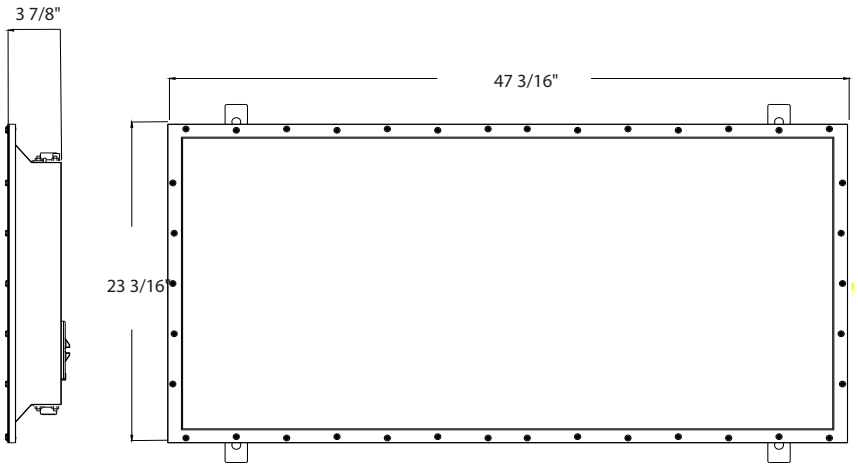

HAZPAN Hazardous Location Lighting

ORDERING MATRIX

HAZPAN

Family	Size		Wattage	Color Temp	Finish	Mount	Voltage	Options
HAZPAN		-						
	2X2 2 ft X 2 ft		40 40W*	BLANK 5000K	BLANK Gray	BLANK Pendant / Ceiling Mount	BLANK 120-277V, 0-10V Dimming	BLANK No Option
	1X4 1 ft X 4 ft		60 60W**					/MVS Microwave Occupancy Sensor (Internal)
	2X4 2 ft X 4 ft		80 80W***					/E Battery Backup

** Available in 2 ft x 2 ft and 1 ft x 4 ft models*
*** Available in all models*
**** Available in 2 ft x 4 ft models only*